coinopmanuals.com

TECHNICAL INFORMATION

FOR NSM–PHONOGRAPH

THE PERFORMER WALL

ES V–CD TECHNOLOGY

with Program V 0003 – 02/93

TO TECHNICAL INFORMATION, ASSY –176705–

NSM
Aktiengesellschaft
Saarlandstraße 240
55411 Bingen am Rhein

1 TECHNICAL INSTRUCTIONS
2 OPERATING INSTRUCTIONS
3 PROGRAMMING
4 CONTROL UNIT ES V
5 DISPLAY / KEY BOARD
6 CENTRAL UNIT ES V
7 OUTPUT STAGE
8 CD-CHANGER with PLAYER CDM-4
9 TITLE INDICATION
10 COIN- and BILL ACCEPTOR
11 REMOTE CONTROL
12 OUTPUT TRANSFORMER
13 OUTPUT
14 TROUBLE SHOOTING
15 ACCESSORIES

coinopmanuals.com

Attention:

Before you'll open any parts or covers marked with this sign:

and before you'll work at the components connected to the mains voltage, as power switch, mains transformer, flourescent lamps and lamps holder, you must unplug the power cable!

GENERAL

The modern technology of this new NSM phonograph "**THE PERFORMER WALL**" with CD changer assures the highest functional reliability. A practical diagnostic system is available for maintenance and service. In order to assure satisfactory operation at all times we recommend reading the technical descriptions carefully so that you are familiar with all service operations.

The following technical documents include:

1 The "**TECHNICAL INSTRUCTIONS**" with important information regarding set–up of the phonograph, technical data, location of the components, the "cabinet" parts list as well as the electrical plan and various wiring diagrams.

2 The "**OPERATING INSTRUCTIONS**" with explanations regarding play and settings as well as short instructions for statistics and service programs.

3 The "**STATISTICS AND SERVICE PROGRAMS**" as well as test programs and error displays. The convenient service programs help the user in maintenance and control and permit the transfer of bookkeeping and technical data into the new NSM recording device and the printer "DATAPRINT".

4–13 The "**UNIT DESCRIPTIONS**" for control unit, display/keyboard, central unit, output stage, CD changer, title display, electronic coin mechanism and bill validator, remote control and output transformer with their functions and, where applicable, wiring diagram and parts list.

14 "**TROUBLE–SHOOTING CHART**", a description of errors, error displays as well as flow chart to determine errors.

15 "**ACCESSORIES**", information on genuine NSM accessories with instructions for installation and exercising options.

The information and illustrations contained in these technical documents are up to date at the time of publication.

SUBJECT TO TECHNICAL MODIFICATION WITHOUT OBLIGATION TO MODIFY EQUIPMENT ALREADY DELIVERED!

Copyright by
NSM Aktiengesellschaft, 55411 Bingen am Rhein 1, Germany

No reprint in full or part unless approved.

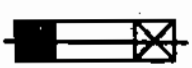

"Caution: Replace With Same Typ Fuses"
"Attention: Utitiser Un Fusible De Rechange de Même Typ"

The CD–player with a laser scanning system used in this phonograph is a class I product (no risk, harmless laser system). The respective label is on the front of the changer behind the viewglass.

176 704 / 176 705 / 176 706
07/93

CE

KONFORMITÄTSERKLÄRUNG

Wir NSM Aktiengesellschaft

Saarlandstr. 240
55411 BINGEN am RHEIN 1

erklären in alleiniger Verantwortung, daß das Produkt

NSM-Musikautomat

THE PERFORMER WALL

auf das sich diese Erklärung bezieht, mit der/den folgenden Norm(en) oder normativen Dokument(en) übereinstimmt.

EN 55 022; EN 60 555-2; EN 60 555-3

Gemäß den Bestimmungen der Richtlinie

89/336/EWG

Bingen am Rhein
22.09.92 Dr. Thomas Kühl

DECLARATION OF CONFORMITY

We NSM Aktiengesellschaft

Saarlandstr. 240
55411 BINGEN am RHEIN 1

declare under our sole responsibility that the product

NSM-PHONOGRAPH

THE PERFORMER WALL

to which this declaration relates is in conformity with the following standard(s) or other normative document(s).

EN 55 022; EN 60 555-2; EN 60 555-3

following the provisions of Directive

89/336/EWG

Bingen am Rhein
09-22-92 Dr. Thomas Kühl

DECLARATION DE CONFORMITE

Nous NSM Aktiengesellschaft

Saarlandstr. 240
55411 BINGEN am RHEIN 1

déclarons sous notre seule responsabilité que le produit

JUKE BOX-NSM

THE PERFORMER WALL

auquel se réfère cette déclaration est conforme à la (aux) norme(s) ou autre(s) document(s) normatif(s).

EN 55 022; EN 60 555-2; 60 555-3

conformément aux dispositions de Directive

89/336/EWG

Bingen am Rhein
22.09.92 Dr. Thomas Kühl

003

coinopmanuals.com

coinopmanuals.com

Note: This equipment has been tested and found to comply with the limits for a Class B digital device, pursuant to Part 15 of the FCC Rules. These limits are designed to provide reasonable protection against harmful interference in a residential installation. This equipment generates, uses and can radiate radio frequency energy and, if not installed and used in accordance with the instructions, may cause harmful interference to radio communications. However, there is no guarantee that interference will not occur in a particular installation. If this equipment does cause harmful interference to radio or television reception, which can be determined by turning the equipment off and on, the user is encouraged to try to correct the interference by one or more of the following measures:

- Reorient or relocate the receiving antenna.
- Increase the separation between the equipment and receiver.
- Connect the equipment into an outlet on a circuit different from that to which the receiver is connected.
- Consult the dealer or an experienced radio/TV technician for help.

CAUTION: These servicing instructions are for use by qualified personnel only. To avoid electric shock do not perform any servicing other than that contained in the Operating Instructions section 2 unless you are qualified to do so. Refer all servicing to qualified service personnel.

Directions for placement of the jukebox license certificate (USA market only).

You will receive the license certificate after paying the necessary fee to the Jukebox License Office.
Find the registration documents within the Jukebox.

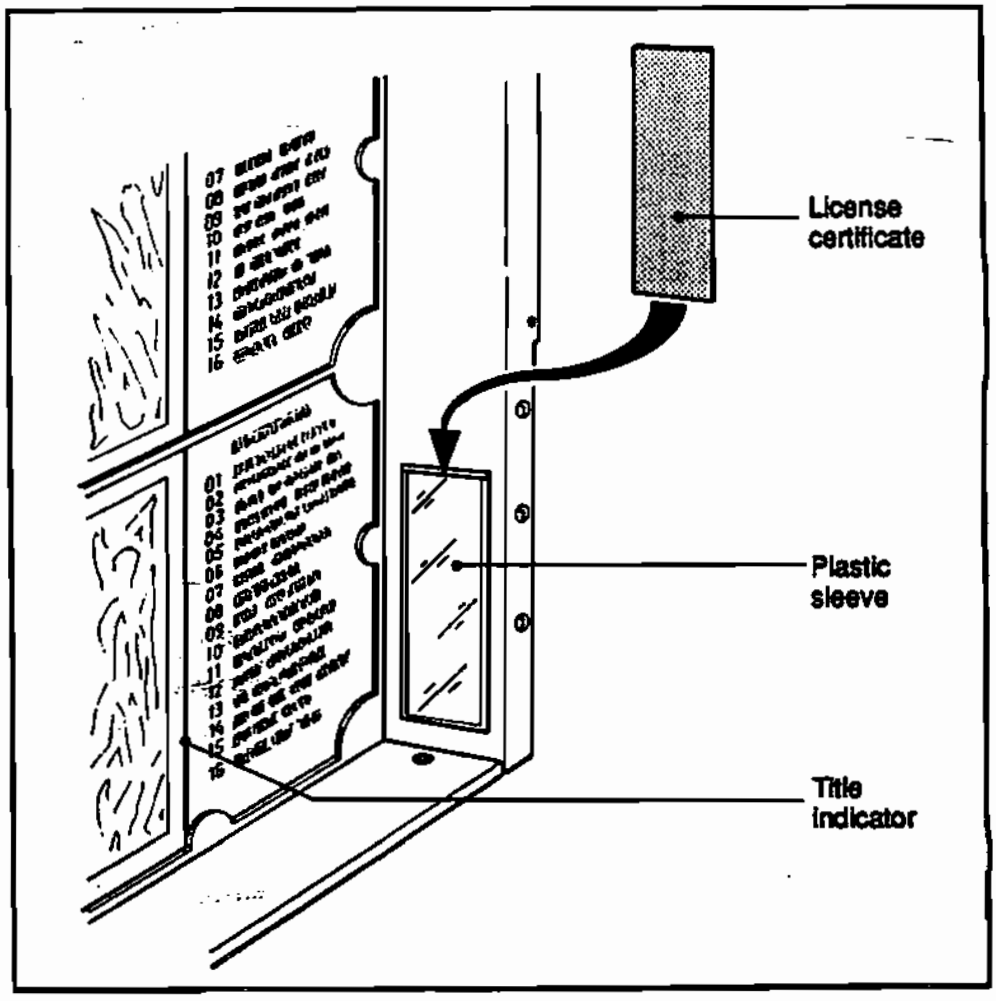

176705

coinopmanuals.com

TECHNICAL INSTRUCTIONS

FOR NSM–PHONOGRAPHS

THE PERFORMER WALL

ES V–CD TECHNOLOGY

TO TECHNICAL INFORMATION, ASSY –176 705–

N S M
Aktiengesellschaft
Saarlandstraße 240
55411 Bingen am Rhein

1

Page 101–135 / 141

coinopmanuals.com

Index

1 **Please read instructions** 103
- 1.1 Transport damages 103
- 1.2 Keys 103
- 1.3 Use NSM mounting bracket 103
- 1.4 Observe when using an upright stand 106
- 1.5 Transportation fixtures 106
- 1.6 Power connection 107
- 1.7 Insert title strips and CD's 108

2 **Location of components** 109
- 2.1 Display and Keyboard 109

3 **Specifications** 110

4 **Loudspeaker connection** 111
- 4.1 Output transformer 114
- 4.2 Connecting diagram for output transformer 118

5 **Maintenance** 119
- 5.1 Cleaning of mirror surfaces 119
- 5.2 Replacing the coloured lamp cover of the 8 W fluorescent lamps 119

Spare parts list "CABINET" 121

Appendix
Operating scheme

coinopmanuals.com

1 Please Read Instructions

Storage and operation of this device is allowed in dry rooms only.

1.1 Transport Damages

If external damage due to transport is noticed, this should at once be recorded on the delivery slip and endorsed by the person making the delivery.

The manufacturer is not liable for damages during transport!

1.2 Keys

One cabinet key is taped onto the front glas. The other keys are placed in the cashbox.
To open the cabinet unlock it on the right side and open the door.

1.3 Use NSM Mounting Bracket (Part–No. 040 739)

So that the coin mechanism can function correctly, mount the phonograph horizontally and vertically correct.
Therefore, we recommend the practical NSM mounting bracket.
Take care to mount the bracket untwisted since the rear of the cabinet can otherwise be twisted.
To secure the phonograph to the bracket, holding screw with sleeve –Part No. 176 999 (M 10x20)– from the accessory bag, is to be used.
Plug in connection cable before mounting (see 1.6 "Power Connection").

Technical Instructions for mounting the machine on the wall

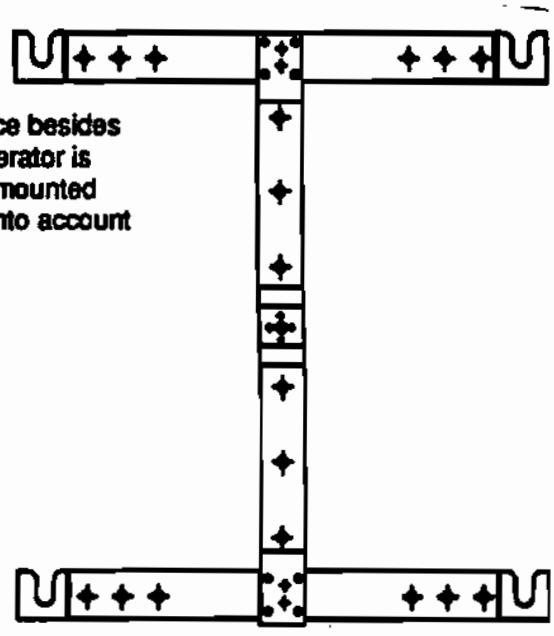

Secure mounting of the machine is very important since besides the danger of severely damaging the machine, the operator is responsible for all damages caused by an incorrectly mounted wallbox. When choosing the fastening material, take into account the machine's wheight of 83 kg.
We recommed dowel pins in sufficient quantities.

The screws should be at least 6 mm in diameter!

coinopmanuals.com

Example of mounting the NSM mounting bracket using nylon dowel–pins

First a few tips:

- The maximum bearing capacity of nylon dowel pins may only be achieved with the greatest possible screw diameters and with screws exceeding the dowel point by the screw diameter again.
- Please ensure that with fixings in hollow brick and hollow blocks that the expansion zone of the dowel is completely anchored in at least one stone web.
- Determination of minimum screw lenght

  1xd (d=nominal diameter of screw)
  + dowel lenght
  + thickness of plaster and/or insulating material
  + thickness of mounting bracket 3 mm

  = Min. screw length

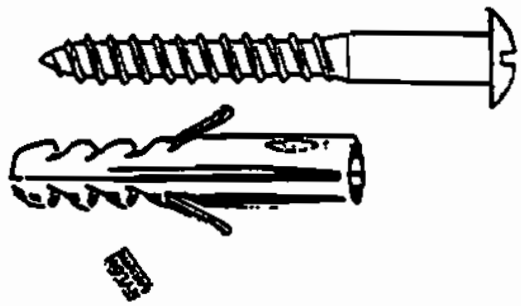

If you observe these tips you will have created the prerequisite for secure fixings.

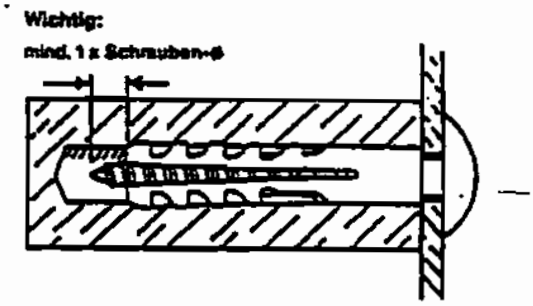

Pull–out values in kN*. Determined in each case with the largest screw diamater (steel screw) and with flush fixing of the dowel in the load–bearing anchorage base.

Allowance must be made for an appropriate safety factor.

	Pull–out values (kN)			
dowel size	S5	S6	S8	S10
Wood screws dia in mm			6	
Concrete B25			4,5	
Aerated concrete GB 3,3			1,2	
Aerated concrete G 4			1,3	
Solid brick Mz20			4,1	
Perforated brick Hlz20			3,0	

*kN = Kilonewton (1kN ≈ 100 kp)

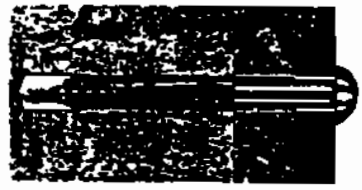
Concrete

Aerated concrete

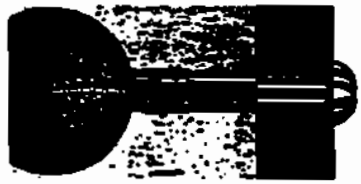
Hollow blocks

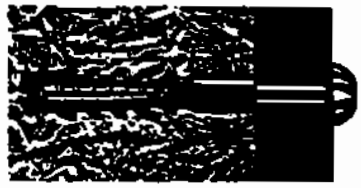
Light building boards

coinopmanuals.com

The following points must be observed when drilling, irrespective of the material:

Drill hole geometry

The exact drill hole geometry dictates the load–bearing capacity of a dowel.
Therefore always drill at right–angles and do not change direction during drilling.
This is especially to be observed in the case of soft materials.

Drill process

The following drilling methods are possible depending on the type of drilling machine:

- Rotary – without impact
- Impact drill–many impacts with a low amount of impact energy. Fast rotation
- Hammer drill – few impacts with a high amount of impact energy. Slow rotation

The material determines the drill process:

- Solid materials of dense structure: impact and hammer drilling
- Hollow brick, materials of low strenght and aerated concrete, only rotary so that the hole does not become too big and in hollow brick the webs do not break out

Never forget to remove the dust from the drill hole after drilling. Only then the dowel performes safety fixing.

Pull–out values, safety factors

The pull–out values (breaking loads) given in this chapter are mean failure loads determined in at least 5 tests in uncracked building material. Failure criteria may be: failure of building material, breaking of bolt, loosening of anchor, breaking of anchor.
The maximum working load is calculated by dividing the pull–out value (breaking load) by the safety factor.

As a safety factor we recommed: for nylon dowel pins $\nu \geq 7$.

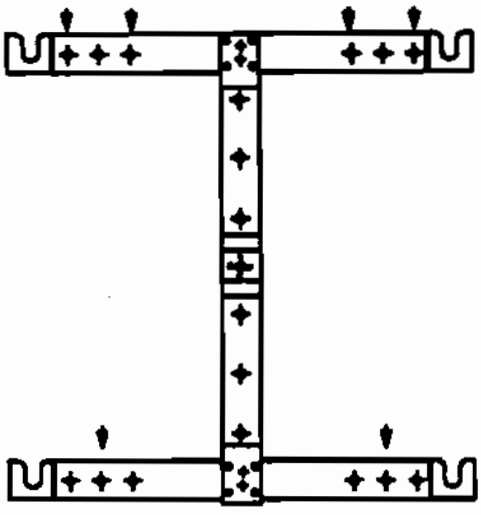

Example: In areated concrete GB 3,3 the pull–out value for dowels type S8 and screwswith a diameter of Ø = 6mm is 1,2 kN. Divided by safety factor 7 becomes

1,2 kN / 7 ≈ 0,17 kN ≈ 17 kp for 1 screw.

The weight of the machine is nearly 83 kg; therefore at least

83 / 17 ≈ 5 screws are necessary.

For additional safety reasons and for better symmetry you should use 6 screws. Also see arrows in left hand figure.

When fixing the machine to the wall, make sure the vent is not hindered in its function. When using the mounting bracket, there is normally enough distance between cabinet and wall for air circulation. Plush wall hangings decrease this distance; in that case the bracket has to be fastened to a flat board. Do not mount machine above heaters!

coinopmanuals.com

1.4 Observe When Using an Upright Stand

If the machine is mounted on a stand, is must be made sure that is cannot fall over. Therefore, it is recommended to use sandbags for example to weigh down the stand. The phonograph should not tip over with opened door and up to an angle of 15° out of the vertical line!

1.5 Transportation Fixtures

Before operating the phonograph all fixtures for safety and protection during transport have to be removed. Prior to any further transportation the safety and protection devices have to be replaced.

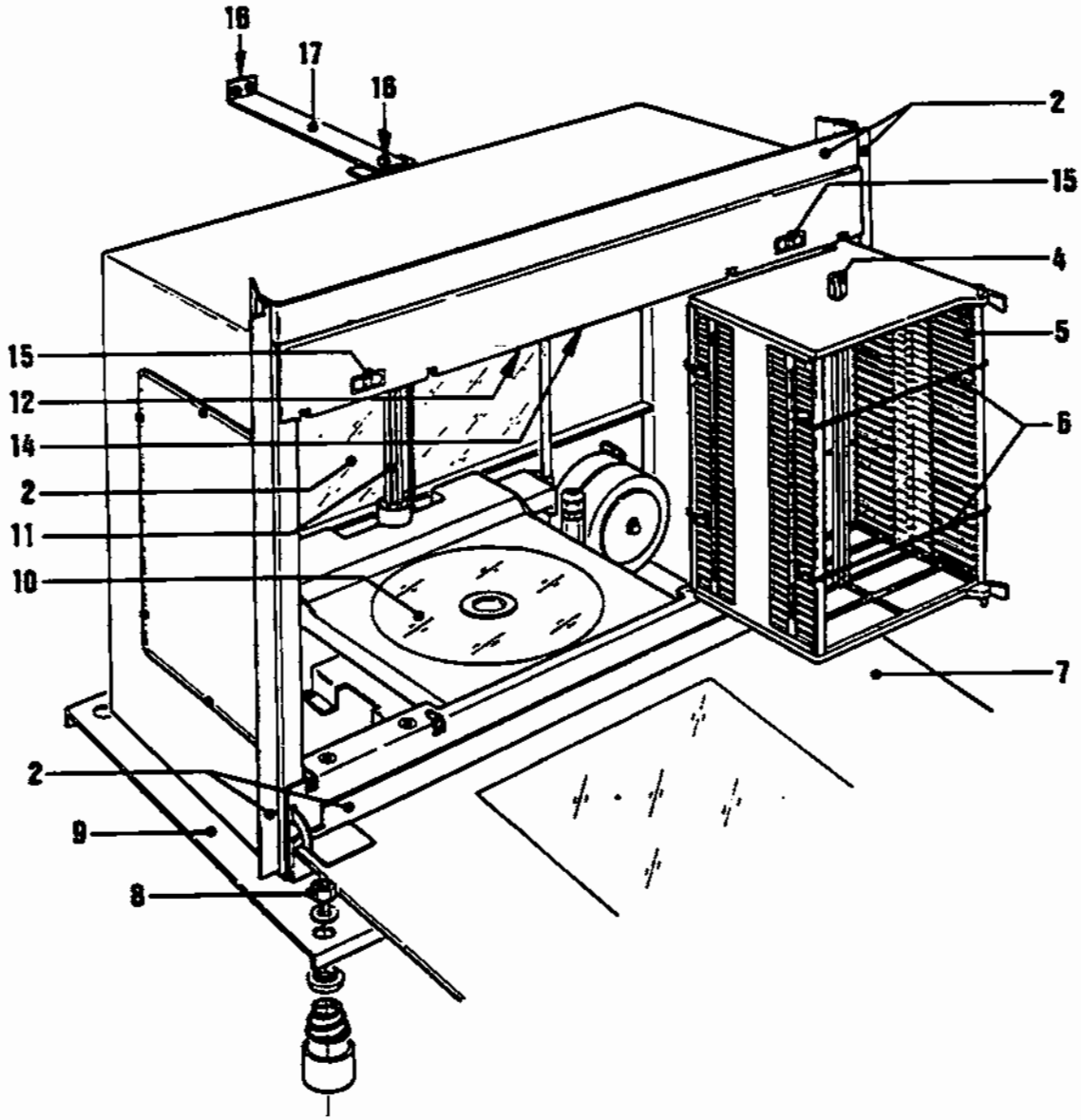

Figure 1: CD changer, transportation fixtures

coinopmanuals.com

Removement of transportation fixtures:

1. Open the machine
2. Open the front door of the CD changer
3. Remove the paper transportation fixture, located between the two CD storage magazines
4. Push the corresponding black knobs (Fig.1–15) to the center and swing out the left and right CD storage magazine (Fig.1–5)
5. –Remove the red plastic splint from the lift axle (Fig.1–11)
6. Remove the four metal clamps mounted to each CD storage magazine (Fig.1–6) by gently pulling them towards you

Keep transportation fixtures in a suitable location in cabinet for later transportation.

If the holding plate (Fig.1–12) is to be folded down, the fastening screw (Fig.1–14) is to be removed.

Information for transport of the CD changer:

When exchanging the CD changerbecomes necessary, it may only be transported in the original packaging!

Perform as follows:

1. Open the front door of the CD changer
2. Push the corresponding black knobs (Fig.1–15) outwards and remove the magazines
3. Remove design parts: Take out front glass (Fig.1–7)
4. Re–install the transportation fixtures in proper sequence

Inserted CD's can be kept from falling out when the red plastic splint from the lift axle as well as a second one from the enclosed package is put through the opening (Fig.1–4) and all CD's of the magazines.

PLEASE OBSERVE!
In order to clean the mirror surface we recommend to use the attached cloth and solvent–free window cleaner.

1.6 Power Connection

Check mains voltage before connecting the phonograph!

The label on the power cord shows the factory setting of the mains voltage.
For other voltages set required voltage by re–wiring the corresponding wires of the mains transformer.
Plug–in power line into 3–pole socket on the rear of the cabinet.

The green–yellow wire of the three–wire power cord must be connected to the ground according to the International safety code.

After plugging in the phonograph, turn on the power switch located under the right side of cabinet.
The fluorescent lights should now light up.

coinopmanuals.com

1.7 Insert Title Strips and CD's

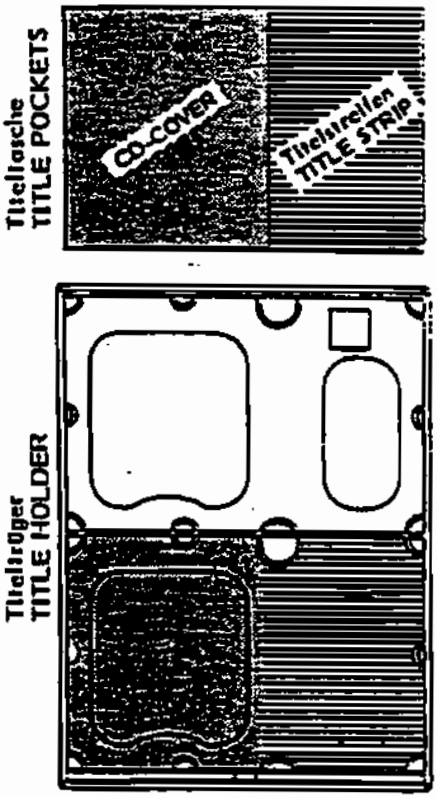

PLEASE OBSERVE!

Equipping of black title holders should be done as follows:

Remove title pockets from accessory pack, insert CD covers on the left side and written title strips on the right side in the title pocket – thicker foil side of title pocket to the outside – and insert then in black title holder.
If the covers are bigger than 120x120 mm, they need to cut to size – please use only title cover.

The title program displays are moved by pressing the <— key or the —> key on the outside of the machine or the "TL" or "TR" key on the title display PCB.

TITLE STRIP Part–No. 219 185
TITLE COVER Part–No. 212 509

In case of dislocation of title holders due to rough transportation, please refer to section 9, paragraph 1.4 "Jammed or dislocated title holders".

Changing CDs: In order to avoid movement of the lift (attract mode) the cabinet switch has to be pulled out. Now the device is in service mode. In addition, the CD will be returned when it remains on the player after the last track (refer to: CD–Changer "Return Holder").
Push the corresponding black knob (Fig.1–15) to the center, fold out the magazine, pull out a tray and load a CD's. Observe the sequence of the magazine and title strip numbers.
Take care to push in the CD trays until they rest in center and do not hinder the lift.

Note:
To take out the magazines push the corresponding black knobs (Fig.1–15) to the outside; take out magazines one after the other!
When transporting loaded magazines the CD's can be protected against falling out by inserting the red plastic splint (Fig.1–4) through the magazines and all loaded CD's.
Use the enclosed four metal clamps (Fig.1–6) as transportation fixture for the CD–magazins.

coinopmanuals.com

2 Location of components

1 Wallbox connection
2 Key switch (optional)
3 Control unit ES–V
4 Central unit ES–V
5 Holder for title indication II
6 Display and Keyboard
7 Cabinet switch
8 Output stage
9 Coin mechanism
10 Output transformer
11 CD changer
12 Cash box

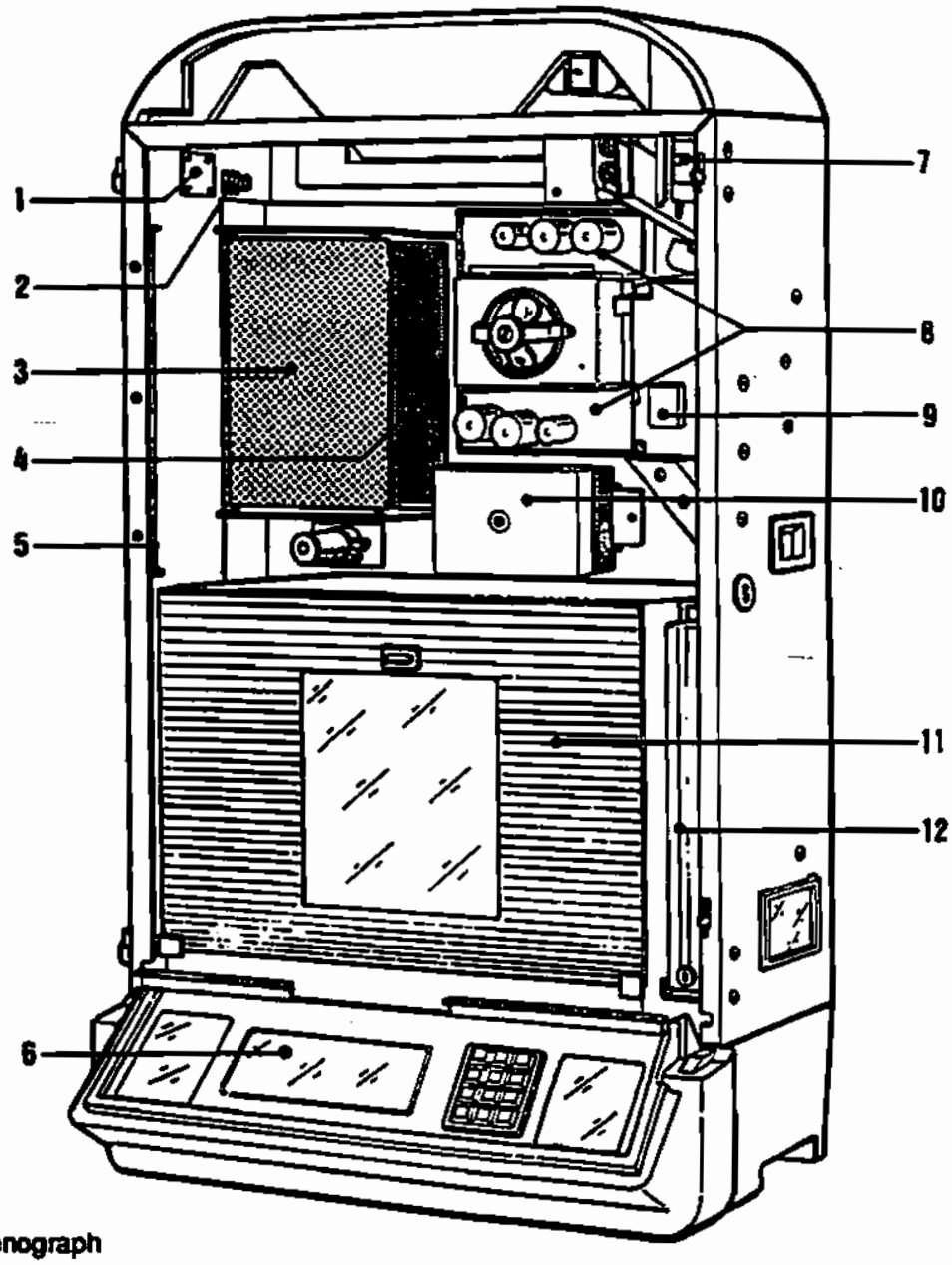

Figure 2: General view to the phonograph

2.1 Display and Keyboard

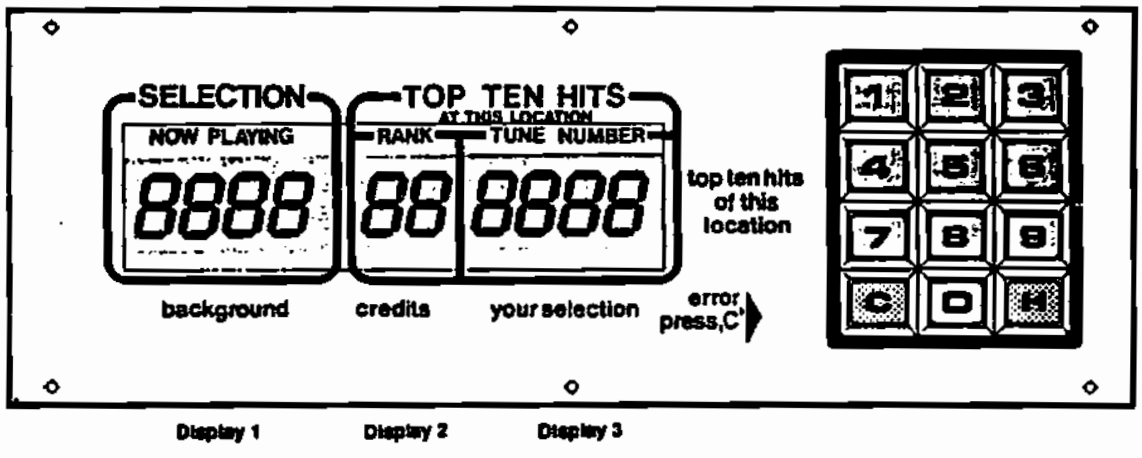

Figure 3: Special view to display and keyboard

coinopmanuals.com

3 Specifications

Electrical Data

Mains voltage:		100–260 V (variable), 50/60 Hz
Power consumption	stand by	170 W
	play mode	450 W

Musik Power

2 ohms load	2 x 200 watts music power (2 x 125W RMS, sine wave power)

Fuses

Replace fuses only with those of same value!

Lighting

Fluorescent lamps	4 W
Fluorescent lamps	8 W
Fluorescent lamps	13 W
Lamps	12 V / 2 W

Dimensions

Height	39,6 inch
Width	23,8 inch
Depth	14,2 inch
Weight	nearly 63 kg

Credit / Cash Input

Maximum credit display is 99.
Price list adjustable individually or as per table.
Free credit adjustment / permanent credit key–operated switch for free credits and background, elect.–mech. cash counter (optional).

Keyboard

10 number keys	0–9
1 correction key	"C"
1 hit–step key	"H"

Displays

Display 1 with 4 seven–segment LED's
Display 2 with 2 seven–segment LED's
Display 3 with 4 seven–segment LED's
1 lamp display "10 top hits"
1 lamp display "background"
1 lamp display "credit"
1 lamp display "your selection"
1 lamp display "error, press key "C"

CD changer

NSM CD changer for maximum 100 CD's, 5 inch. Disc–player: Philips CD–player unit.

Special Features

Integrated microphone preamplifier and connection socket for microphone with paging switch.
Computer–controlled amplifier protection for overload (mismatch).

coinopmanuals.com

4 Loudspeaker connection

Stereo mode

The connection wires of the external loudspeakers are led through an opening in the lower cabinet part (left rear) to the inside, through the bottom in the cabinet corner upwards, and then to the connection terminals of the output stage.

The polarity ▼ must be maintained because otherwise bass reproduction would nullify itself!

The ES–IV amplifier serves an output of 2 x 200 watts music power at 2 ohms per channel (2 x 125W RMS). If the loudspeaker impedance is 4 ohms, the loudspeaker will use 2 x 100 watts music power (Fig. 4) from the amplifier.

In that case, the additional loudspeakers connected cannot have an impedance of less than 4 ohms since the amplifier otherwisewould be "mismatched" and the overload protection would operate.
If loudspeakers with a higher impedance are connected (Fig. 5), a number of speakers can be connected parallel. In that case, a loudspeaker with a higher impedance would naturally be lower in volume.

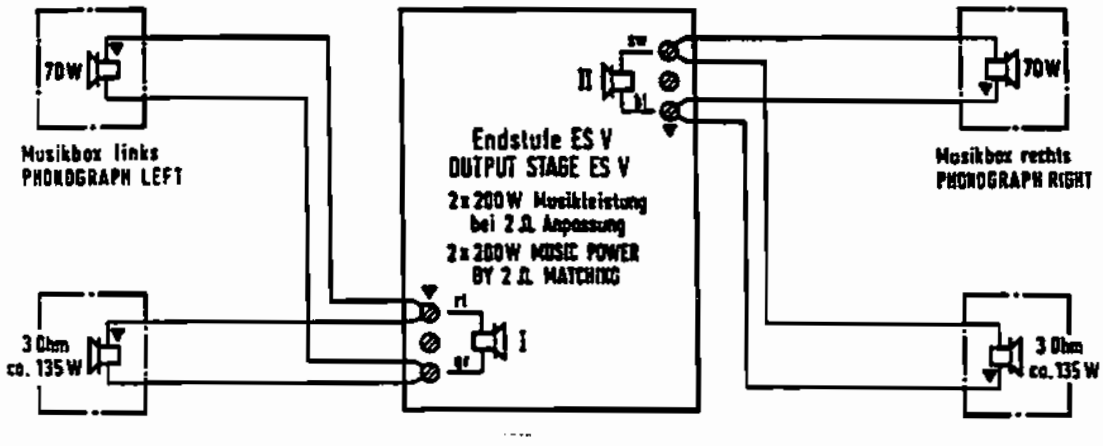

Figure 4: Stereo mode with normally connected loudspeakers

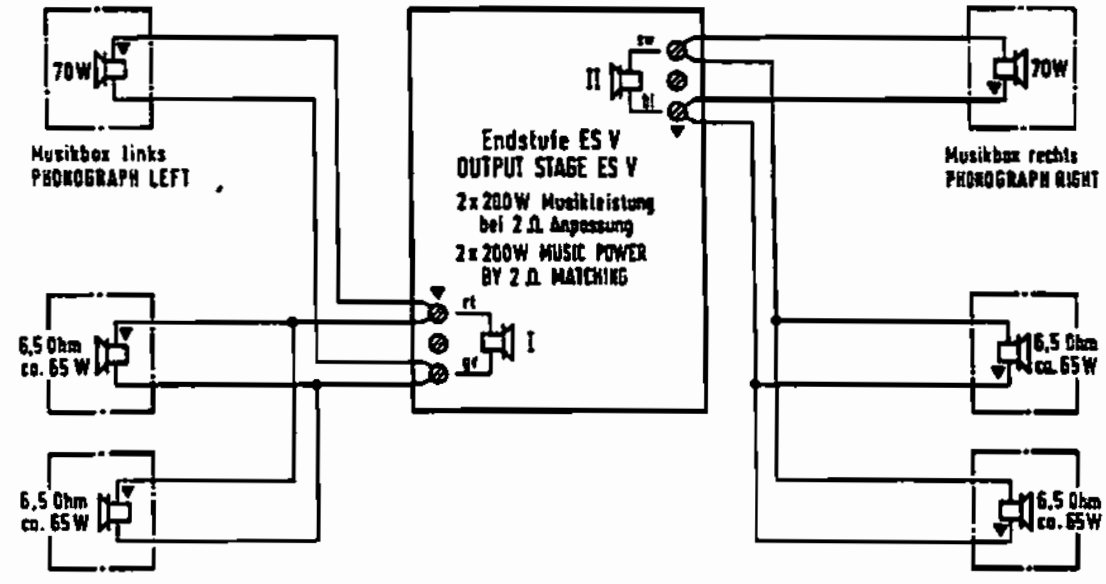

Figure 5: Stereo mode with connected loudspeakers having high impedance

coinopmanuals.com

Mono mode

Sound system for separate rooms (Fig. 6)
If the volume is to be controlled independently from 2 rooms, the loudspeakers of the first room can be connected to one channel. The loudspeakers for the other room can then be connected to the second channel. The switch S1 "Mono/Stereo" located on the PCB "Central Unit" has to be switched to "MONO" (Fig.8). For this independent procedure a volume control with separate controls is necessary (refer to "Remote control").

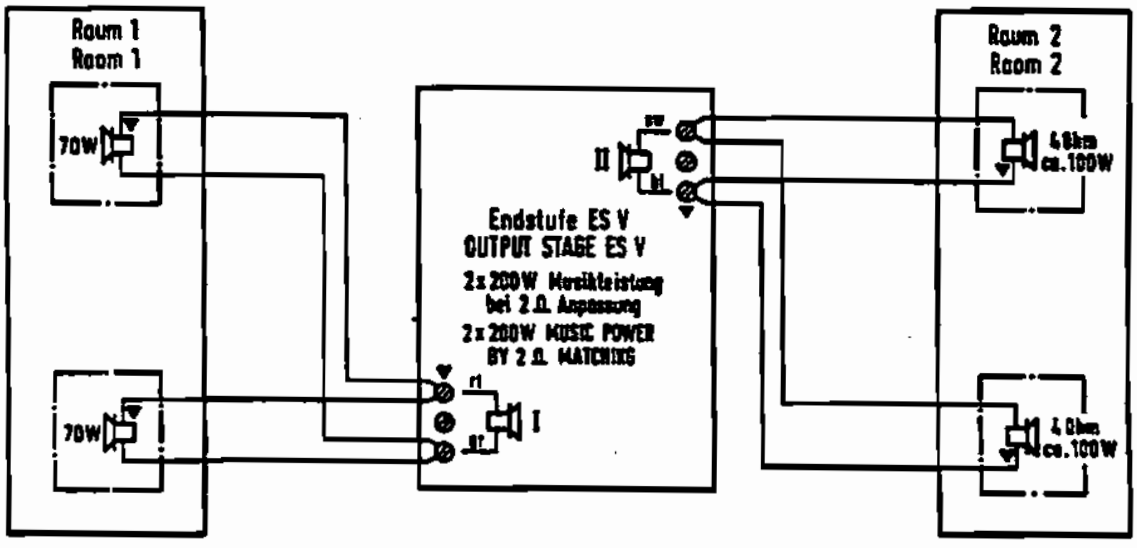

Figure 6: Mono mode with connected loudspeakers for seperated rooms

Loudspeakers for seperated rooms in serial connection result in lower volume!

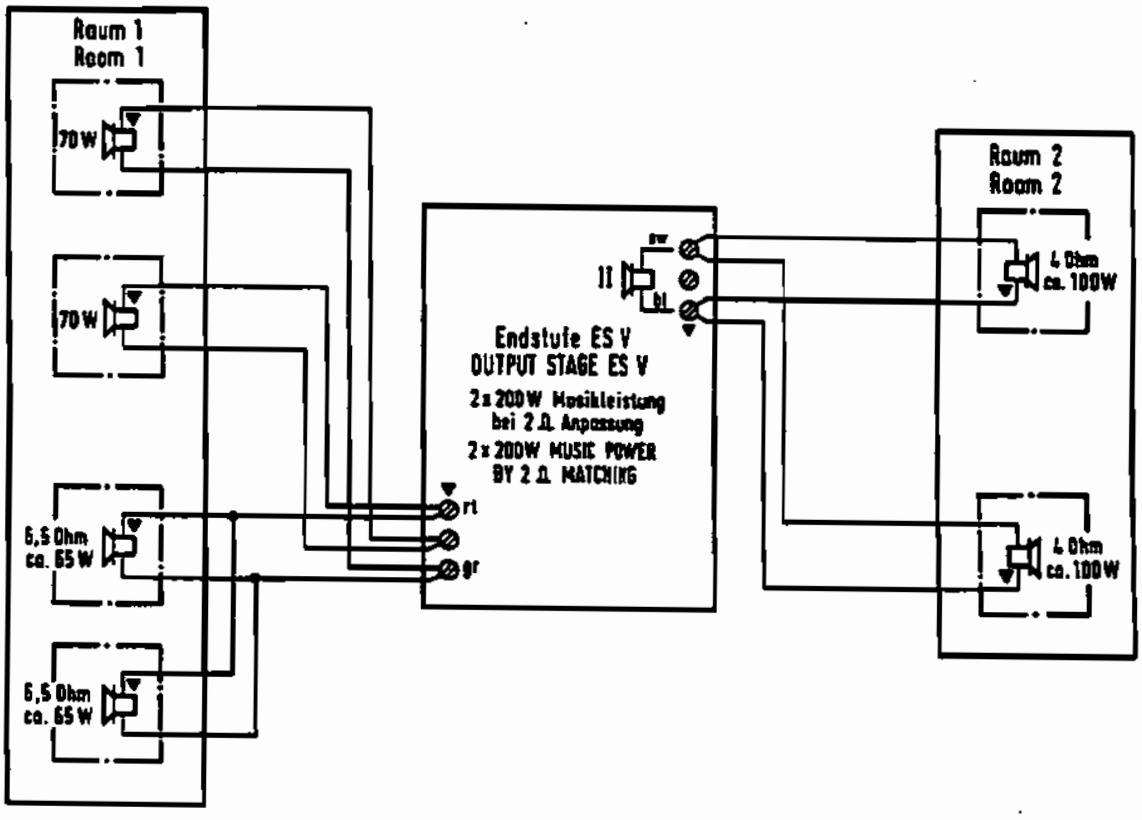

Figure 7: Mono mode with serial connected loudspeakers

If even more speakers are to be connected whereby the total impedance drops below 2 ohms, an output transformer has to be used. Refer also to "4.1 Output transformer" and section 13 "Output Transformer". An auxiliary amplifier can be connected for independent stereo control of other rooms as well as for increased power requirements. See also unit description "Central Unit", connection of auxiliary amplifier, and "Accessories", tape recorder connection cable or CD-audio connection.

coinopmanuals.com

Locating the Mono/Stereo switch on the PCB "Central unit"

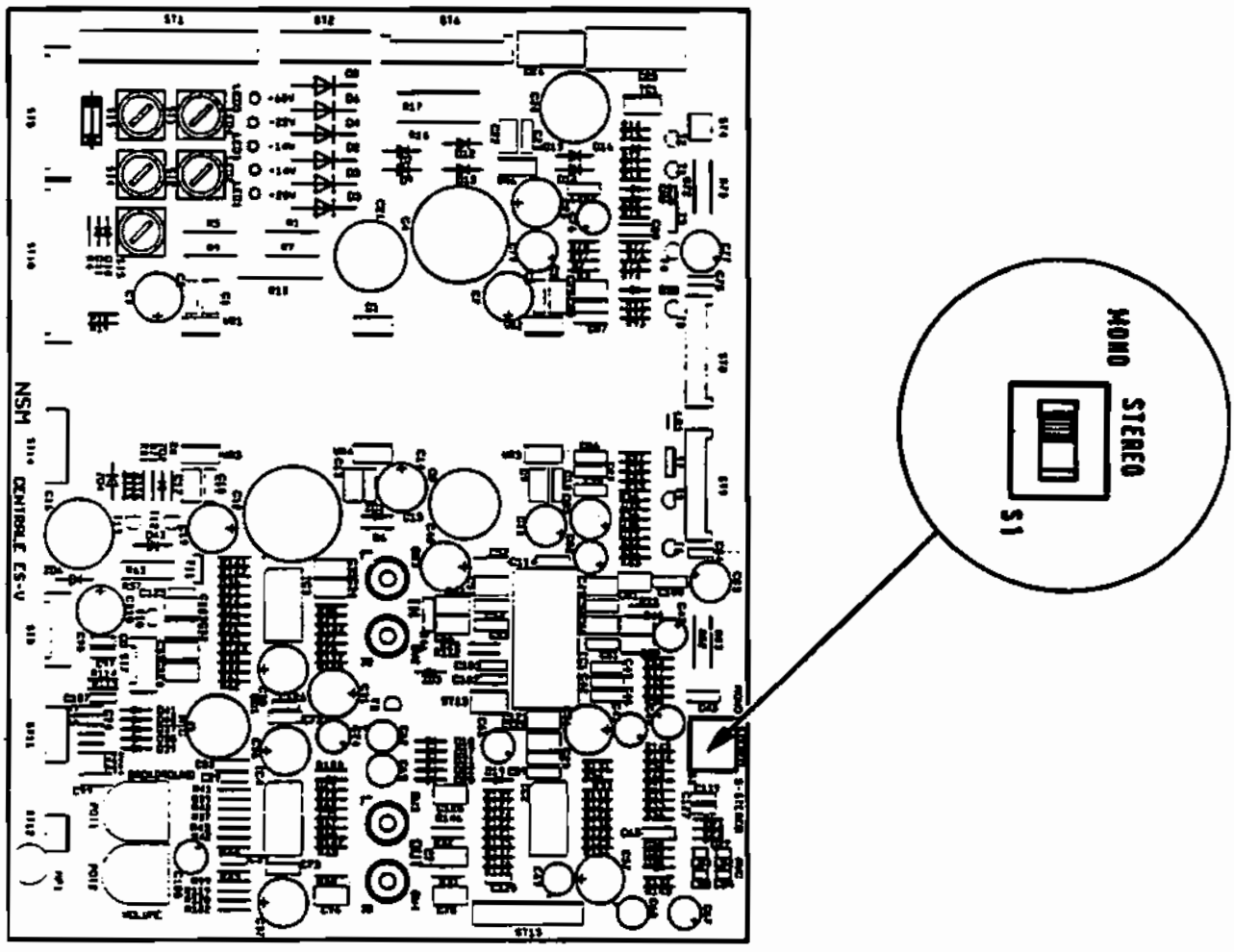

Figure 8: View to the layout of the PCB "Central unit", Mono/Stereo switch
Shown position: MONO

coinopmanuals.com

4.1 Output transformer

Extension Speaker Operation

To avoid a poor sounding phonograph, care must be taken when adding extension speakers. Three requirements must be met:

1.) Speakers must be wired so that the power consumed by the phonograph speakers and the extension speakers, including wallettes, does not exceed the amplifier power rating.

2.) Extension speakers should produce the desired sound level relative to the sound level of the speakers on the phonograph.

3.) All speakers must be connected with the correct polarity.

Several tales have been included to assist you with connecting the extension speakers. The schematic at the end of this chapter shows the entire sound system.

Low impedance Speakers

4–ohm–speakers

No more than one 4–ohm speaker should be connected to a speaker line. If several 4–ohm speakers are to be used, each speaker should have its own line.

8–ohm–speakers

Low impedance speakers with 8 ohms can be used when the connecting cable is less than 100 feet.
The loss on 100 feet of connecting cable (type: AWG 18/0,75 $mm^{2)}$ feeding one 8–ohm speaker is 15 %.
The loss for two 8–ohm speakers is 30 %.

Do not connect a low impedance speaker to a speaker tap that exceeds the speaker's power rating.

70–VOLT Speakers

To avoid prohibitive cable losses on long speaker lines, 70–volt speakers should be used as much as possible. The power level in the 70–volt speakers is set at each speaker with its internal transformer.

CAUTION:
In any speaker installation, the total speaker load (the sum of the power ratings of all speakers) must not exceed 250 W RMS (sine wave power, 125 W per channel).

Music power: Often there are two values given as technical data of loudspeakers:

Beneath the sine wave power (RMS) there is given also the allowable peak load (music power).

The music power can be calculated as follows:

Multiplying the sine wave power by the value 1.6 gives the value of the music power
(e.g. 125W RMS x 1.6 = 200W music power).

coinopmanuals.com

Selecting speaker power

General Instructions

This section will lead you through the power and speaker selection process. This process consists of three major steps and several smaller steps. The major steps are:

1.) Identifying the extension speakers and calculating the extension speakers power.

2.) Making the external speaker connections.

3.) Determining and selecting the phonograph power.

Definition of extension loudspeakers and calculation of their power consumption

1) Use a pencil (you may want to revise your entries) to write data to the work sheets on the following pages.

Use table 1 to calculate the amount of power consumed by the extension speakers.

2) Note the quantity of 4–ohm–speakers in the space of the column "Quantity".
Enter stereo speakers as two speakers.
Multiply the quantity with the power consumption.

Place your results in 4) at the space **"Total"**.

3) Afterwords note the quantity of 8–ohm–speakers in the same manner.

Then also note the quantity of 70–Volt–Loudspeakers.

Note the results of the corresponding calculations also in 4) at the space **"Total"**.

coinopmanuals.com

Table 1: Calculation of the speakers power

4–ohm–stereo–loudspeakers

	Quantity	Powerconsumption	Connecting taps
loudspeaker for 1,0 Watt:	___ each 1,0 Watt	= ____ Watt	(E1 and E2)
loudspeaker for 4 Watt:	___ each 4 Watt	= ____ Watt	(E1 and E3)
loudspeaker for 16 Watt:	___ each 16 Watt	= ____ Watt	(E1 and E4)
loudspeaker for 28 Watt	___ each 28 Watt	= ____ Watt	(E1 and E5)
loudspeaker for 55 Watt:	___ each 55 Watt	= ____ Watt	(E1 and E6)
loudspeaker for 112 Watt:	___ each 112 Watt	= ____ Watt	(E1 and E7)
4–ohm–loudspeaker	Total	= ____ Watt	

8–ohm–stereo–loudspeakers

	Quantity	Powerconsumption	Connecting taps
loudspeaker for 0,5 Watt:	___ each 0,5 Watt	= ____ Watt	(E1 and E2)
loudspeaker for 2 Watt:	___ each 2 Watt	= ____ Watt	(E1 and E3)
loudspeaker for 8 Watt:	___ each 8 Watt	= ____ Watt	(E1 and E4)
loudspeaker for 14 Watt	___ each 14 Watt	= ____ Watt	(E1 and E5)
loudspeaker for 30 Watt:	___ each 30 Watt	= ____ Watt	(E1 and E6)
loudspeaker for 55 Watt:	___ each 55 Watt	= ____ Watt	(E1 and E7)
8–ohm–loudspeaker	Total	= ____ Watt	

70–Volt–loudspeakers

70–Volt–loudspeakers have a direct voltage tap. The variable power selection is performed at the corresponding transformer integrated in each speakers cabinet. Add the power consumption of all 70–Volt–speakers and note this total value:

70–Volt–loudspeaker	= ____ Watt	(A1 and A2)

4) After you have calculated all the necessary values you have to add them to get the

total power consumption of extension speakers:

Total power consumption of 4–ohm–loudspeakers _____ Watt
Total power consumption of 8–ohm–loudspeakers _____ Watt
Total power consumption of 70–Volt–loudspeakers _____ Watt

Total power consumption of all extension speakers _____ Watt in STEREO.

Now this is the necessary power consumption which the amplifier of the phonograph at least must supply. This value must be less then the maximum power consumption of 250 W RMS. If it is more then 250 W RMS you have to reduce the number of connected speakers. Afterwords calculate it once more.

coinopmanuals.com

NOTE:
The amplifier may be rated up to 250 W RMS before the delimitation will start.

Connecting the output transformer to the amplifier

The connection between the amplifier of the phonograph and the output transformer is realized using coloured wires. The **red** wire is used to connect the hot pole of the left channel and the **blue** wire is used to connect the right channel. The **black** wire and the **grey** wire are used as the corresponding reference potential (ground). The ground wires are always connected to the tap E1 (ground) of the output transformer.

Refer to the following table 2 to select output taps for less volume of the connected loudspeakers.

Select the speaker taps that will use up most of the available speaker power.

You may select more or less phonograph power to suit your phonographs volume preference.

Table 2: Output taps for less volume

Volume	Connect the stereo speakers with the
low volume	red wire to the left E2, resp. blue wire to the right E2
.	red wire to the left E3, resp. blue wire to the right E3
.	red wire to the left E4, resp. blue wire to the right E4
.	red wire to the left E5, resp. blue wire to the right E5
.	red wire to the left E6, resp. blue wire to the right E6
full volume	red wire to the left E7, resp. blue wire to the right E7

Take care not to overload the loudspeakers. Refer also to section 13 "Output Transformer".

Do not change the connection of the black wire or the grey wire. They should stay on either the left or right E1 taps to define the reference potential.

See also to the connection diadram of the speakers connection on the following page.

Check that the phonograph is not overloaded by performing the following four steps

A. Make sure that the internal and the external loudspeakers are connected to the proper connectors.

B. Set the phonographs volume to full power (display = 31) and make a selection.

C. While the music is playing no overload distortion / interruption should occur.
The volume should not be decreased automatically from its value (31), shown on the display.
If any distortion / interruption occurs or if the volume is decreased, the amplifier is overloaded. Then you have to perform step D

D. Perform this step only if any distortion / interruption occurs.
Find and correct the reason for this overload, perhaps there is a short circuit on a loudspeaker or too many loudspeakers are connected.
Then repeat step C.

coinopmanuals.com

4.2 Connecting diagram for output transformer

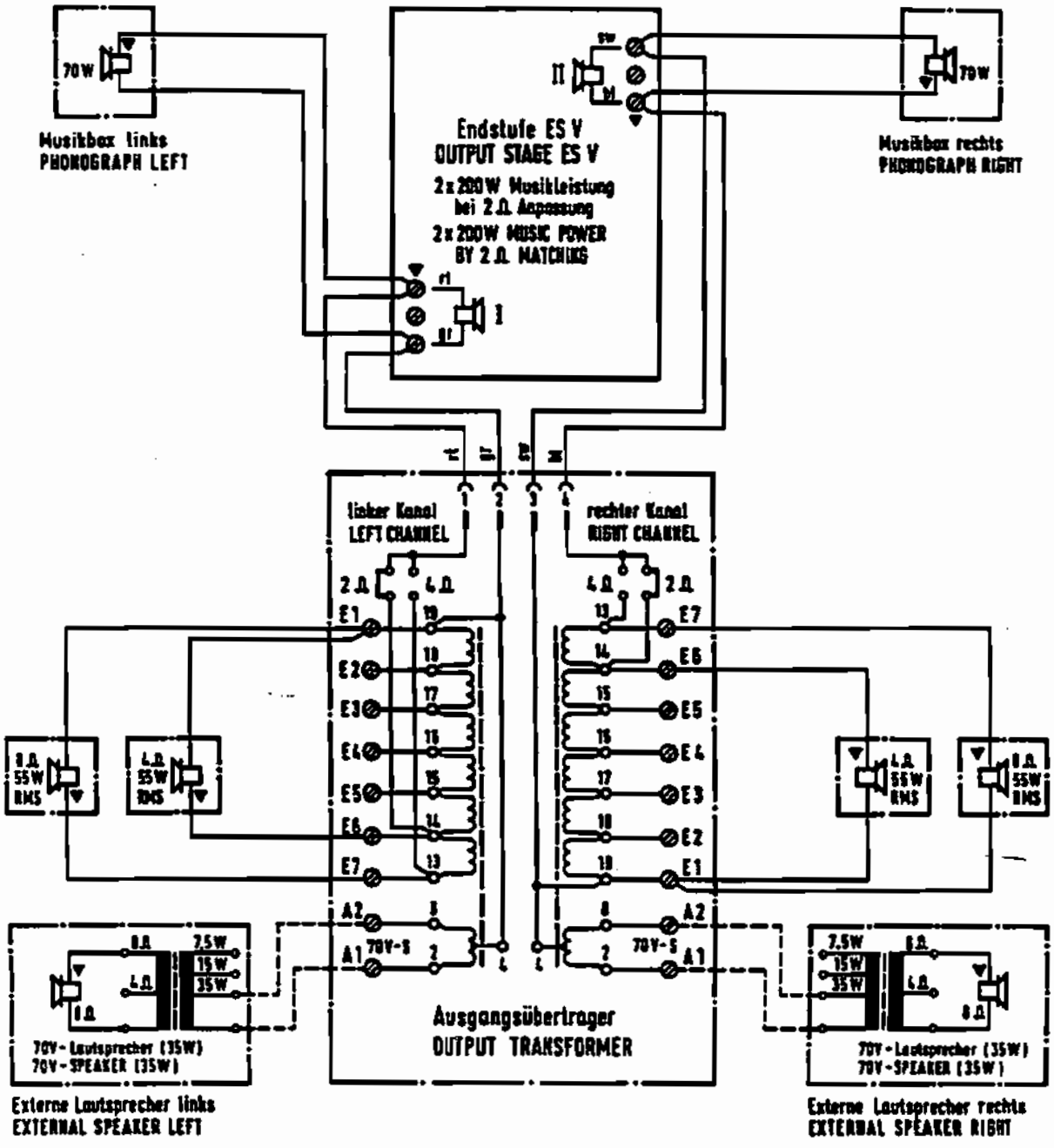

Anschlußschema für Ausgangsübertrager
CONNECTION DIAGRAM FOR OUTPUT TRANSFORMER 177 075

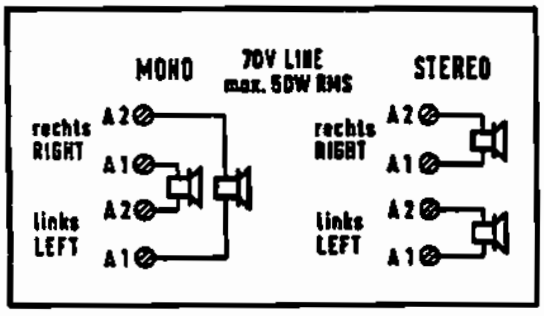

Klemme TERMINAL POSITION	Lautsprecher SPEAKER				
	1 Ω	2 Ω	4 Ω	8 Ω	16 Ω
E1 - E2	4W RMS	2W RMS	1W RMS	0,5W RMS	0,3W RMS
E1 - E3	16W RMS	8W RMS	4W RMS	2W RMS	1W RMS
E1 - E4	64W RMS	32W RMS	16W RMS	8W RMS	4W RMS
E1 - E5	112W RMS	56W RMS	28W RMS	14W RMS	8W RMS
E1 - E6	—	112W RMS	56W RMS	30W RMS	16W RMS
E1 E7	—	—	112W RMS	56W RMS	28W RMS

coinopmanuals.com

5 MAINTENANCE

5.1 Cleaning of mirror surfaces

Please observe

In order to clean the mirror surface we recommend to use a soft cloth and solvent–free window cleaner!

5.2 Replacing the coloured lamp cover of the 8 W fluorescent lamps

Take care

not to destory the new fluorescent lamp while mounting the coloured lamp cover!
8 W fluorescent lamps only!

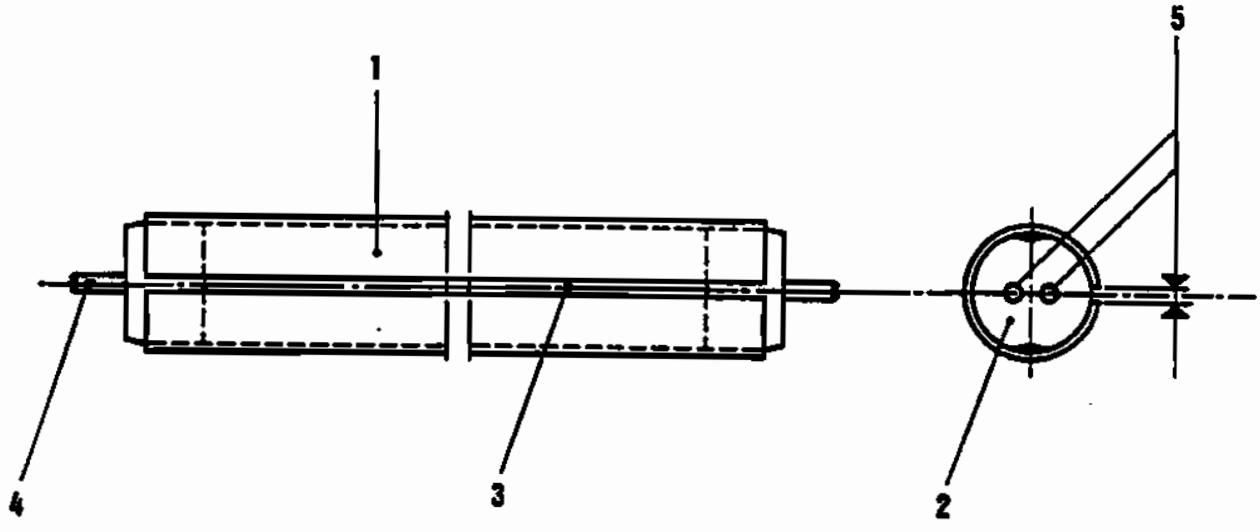

Figure 9: Replacing the coloured lamp cover

Replacing

1.) Remove the coloured lamp cover (Fig.9–1) from the defective lamp.

2.) Warm up the lamp cover using a hair drier for example.

3.) Mount the warmed lamp cover over the new lamp. Make sure that the slot (Fig.9–3) of the lamp cover and the pins (Fig.9–4) of the lamp are aligned (Fig.9–5).

coinopmanuals.com

coinopmanuals.com

SPARE PARTS LIST FOR NSM–PHONOGRAPH

"THE PERFORMER WALL"

coinopmanuals.com

This spare parts list is applicable for NSM–Phonograph: **"THE PERFORMER WALL"**

Every spare part order should contain the following:

1. Model
2. Serial number
3. Quantity
4. Part number
5. Description

Example

Model	Serial–Number	QTY	Part–No.	Description	Data
THE	02 904	1	223 423	MAINS TRANSFO	
PERFORMER		2	224 188	BALLAST	VG 13/2 KY
WALL		1	225 343	STARTER	S2

ATTENTION!

Precise orders save unnecessary questions and bring the best results.

ORDER SPARE PARTS THRU YOUR NSM–DISTRIBUTOR!

Information and illustrations contained in this spare parts list, are correct at the time of going to press.

NSM–AKTIENGESELLSCHAFT, Saarlandstraße 240 – 55411 BINGEN am Rhein

INDEX

Page 123	UNITS and ACCESSORIES
Page 124–127	CABINET
Page 128–131	FRONT FRAME
Page 132–133	CB–ILLUMINATION LIGHT, ASSY
Page 134	CABLE HARNESSES
Page 135	COMPONENT PARTS 60 Hz / 100–127 V

coinopmanuals.com

SPARE PARTS LIST for THE PERFORMER WALL

POS.	PART–No.	DESCRIPTION	DATA	QTY
		PHONOGRAPH "THE PERFORMER WALL"	**50 Hz**	
		UNITS		
	176 328	CB–CONTROL UNIT ES V, ASSY	see page 400 ...	1
	173 664	CB–DISPLAY CD, ASSY	see page 500 ...	1
	176 326	CENTRALE ES V, ASSY	see page 600 ...	1
	171 701	OUTPUT STAGE, ASSY	see page 700 ...	1
	176 360	CD–CHANGER, ASSY (without Design Piec.)	see page 800 ...	1
	176 615	BACK COVER		1
	212 650	TRIMPLATE, PRINTED		1
	176 682	VIEW GLASS, MOUNT.		1
	176 730	CD–TITLE INDICATION III, ASSY	see page 900 ...	1
	212 523	TITLE POCKET	(only GB)	105
	212 509	TITLE POCKET	(not for GB)	105
	219 185	TITLE STRIP		120
	040 739	MOUNTING BRACKET, ASSY		1
	176 719	BACTA – CONNECTION, ASSY	(for GB only)	1
		ACCESSORIES		
	177 075	OUTPUT TRANSFORMER	(for USA standard)	1
	172 504	CABLE HARNESS		1
	174 258	IR–REMOTE CONTROL, ASSY		1
	206 783	TRANSMITTER		1
	173 178	RECEIVER	with 5 m CABLE	1
	171 743	REMOTE CONTROL	with 5 m CABLE	1
	172 077	REMOTE CONTROL	with 20 m CABLE	1
	173 996	WALLBOX–CONNECTION, ASSY		1
	173 464	WALLBOX–ADAPTER, ASSY		1
	223 422	TRANSFORMER		1
	173 997	CABLE HARNESS: TRANSFORMER — ADAPTER		1
	173 998	CABLE HARNESS: TRANSFORMER		1
	209 944	INSTALLATION INSRUCTION		1
	173 348	CASH COUNTER, ASSY		1

ATTENTION!

DEVIATE SPARE PARTS for PHONOGRAPH "THE PERFORMER WALL – USA" 100/127 V – 60 Hz
see page 135

coinopmanuals.com

SPARE PARTS LIST for THE PERFORMER WALL

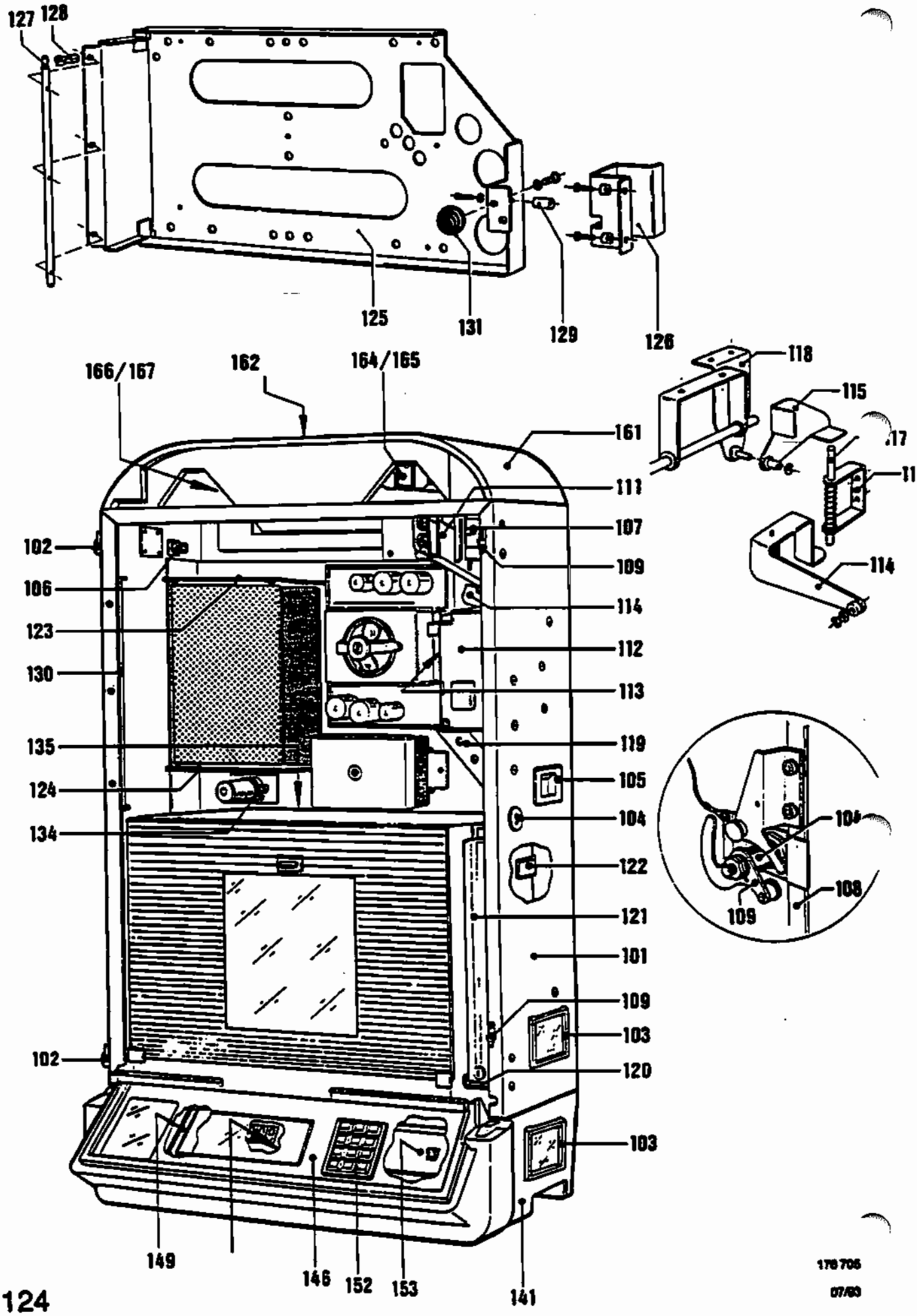

178706
07/89

coinopmanuals.com

SPARE PARTS LIST for THE PERFORMER WALL

POS.	PART–No.	DESCRIPTION	DATA	QTY
		PHONOGRAPH "THE PERFORMER WALL"	**50 Hz 220 V**	
101	175 711	CABINET, PRE–MOUNTED		1
102	113 326	HINGE–BOTTOM PART, ASSY		2
103	114 664	FRAME for ADDRESS and TYPE		2
	215 008	PLATE for ADDRESS		1
104	206 676	CYL.–LOCK		1
	206 718	SPARE KEY		1
105	029 335	COIN RETURN CUP		1
	102 495	COIN LID		1
106	222 505	KEY SWITCH		1
	174 252	HOLDER		1
107	222 509	PUSHBUTTON SWITCH	CABINET SWITCH	1
108	114 674	CLOSING RAIL, ASSY		1
109	211 474	CLOSING BRACKET		2
110	112 959	CLOSED, STAMPED		1
	205 722	TENSION SPRING		1
111	174 521	COIN CHANNEL		1
112	172 164	MARS COIN ACCEPTOR GB	10/20/50p/1 £	1
	175 708	FLAT SPRING		1
113	172 139	CB–MARS COIN ACCEPTOR, ASSY		1
114	173 725	COIN RETURN LEVER, STAMPED		1
115	173 726	BAFFLE LEVER, STAMPED		1
116	175 710	RETAINER		1
117	173 655	COIN RETURN PLUNGER	(COIN RETURN)	1
	205 265	PRESSURE SPRING		1
118	173 727	HOLDING BRACKET, STAMPED		1
119	175 860	COIN TUBE	(CASH BOX)	1
	174 377	COVER PLATE		1
120	173 745	HOLDING PLATE		1
	174 211	SPACER BOLT		4
121	174 383	CASH BOX		1
	206 656	CYL.–LOCK		1
	173 908	CLOSING LEVER		1
122	173 903	RETAINER		1
	173 904	SLEEVE		2
123	176 303	BRACKET, ASSY	CENTRALE and	1
124	176 304	BRACKET, ASSY	CONTROL UNIT	1
125	176 020	BACK PLATE II		1
126	176 022	LOCKING PLATE II		1
127	176 023	AXLE		1
128	175 204	CLIP	TITLE INDICATION III	1
129	176 024	BUSHING	176 730	1
130	176 048	BEARING PLATE II		1
131	217 391	BALL HANDLE ⌀ 35		1

coinopmanuals.com

SPARE PARTS LIST for THE PERFORMER WALL

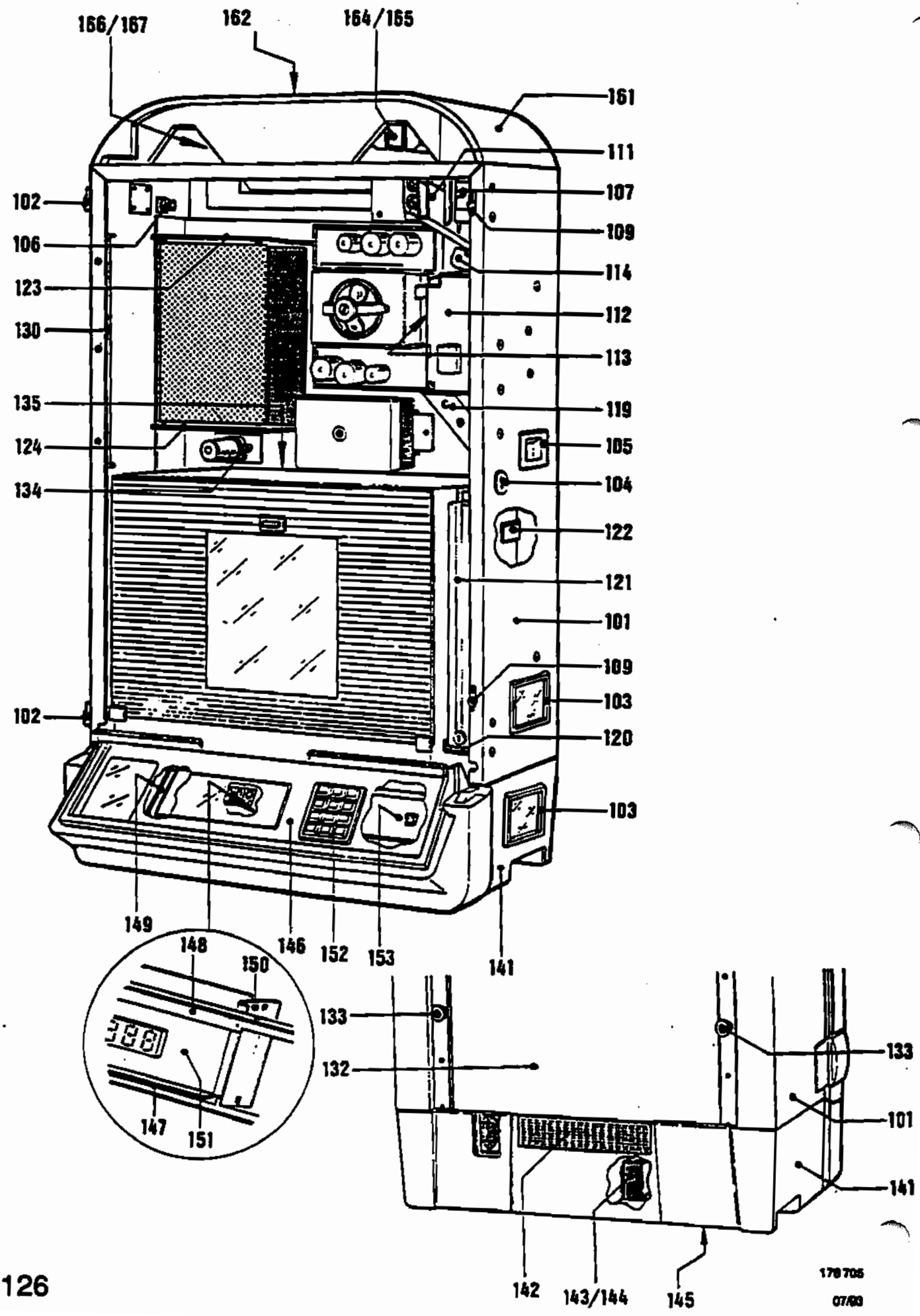

coinopmanuals.com

SPARE PARTS LIST for THE PERFORMER WALL

POS.	PART–No.	DESCRIPTION		DATA	QTY
132	211 675	BACK COVER			1
133	176 972	GUIDE PATRS			4
	642 037	SCREW M 5x28			4
134	225 364	STARTER HOLDER			1
	225 040	STARTER		S10	1
135	225 365	LAMP HOLDER			2
	226 086	FLUORESCENT LAMP		8 W	1
		BOTTOM PART			
141	176 703	BOTTOM PART			1
142	175 750	VENTILATIONS PLATE I			1
143	173 697	TRANSFO PLATE, WELDED			1
144	223 423	MAINS TRANSFORMER			1
	224 215	BALLAST			1
	225 925	NOISE SUPPRESSION			1
145	176 716	SWITCH PLATE, PRE–MOUNTED		(VOLUME CONTROL)	1
	175 180	SWITCH PLATE, PRINTED			1
	222 452	PUSH BUTTON	GREEN		1
	222 470	PUSH BUTTON	WHITE		1
	222 471	PUSH BUTTON	RED		1
146	176 636	DESK PLATE, WELDED			1
147	176 630	HOLDER, LOWER			1
148	176 629	HOLDER, UPPER			1
149	176 632	INTERMEDIATE HOLDER			1
150	176 631	FLAT SPRING			1
151	173 664	CB–DISPLAY, ASSY			1
152	176 671	KEY BOARD, ASSY			1
153	176 679	LAMP TRIMPLATE			1
154	176 673	GLASS, PRINTED	ENGLISH	right	1
155	176 675	GLASS, PRINTED	ENGLISH	left	1
156	173 794	GLASS, PRINTED	ENGLISH	middle	1
		GUARD			
161	176 961	GUARD			1
162	176 968	COOLING PLATE			1
	205 538	TENSION SPRING			1
166	224 215	BALLAST		4–6–8	2
167	224 188	BALLAST		13/23 SY	3

coinopmanuals.com

SPARE PARTS LIST for THE PERFORMER WALL

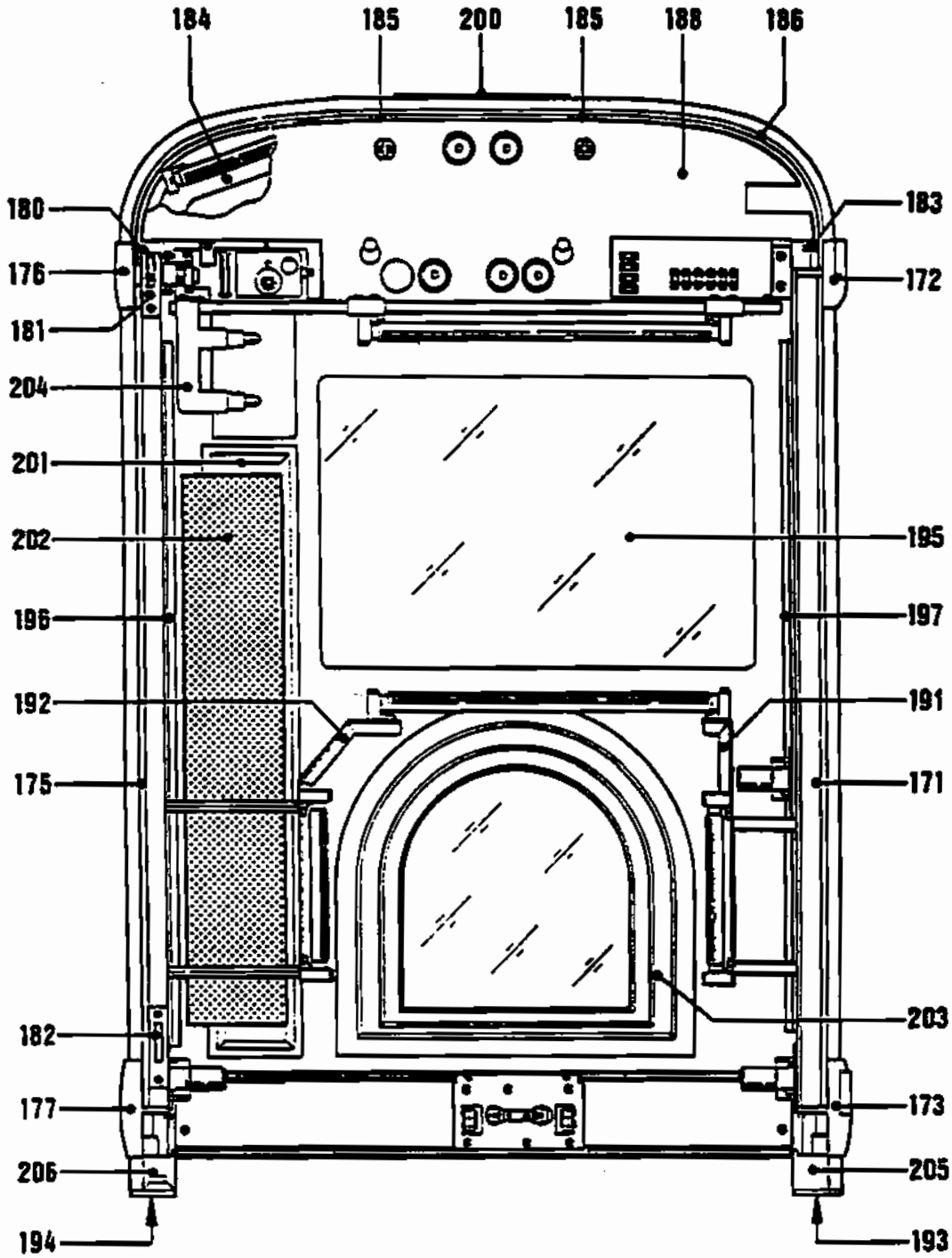

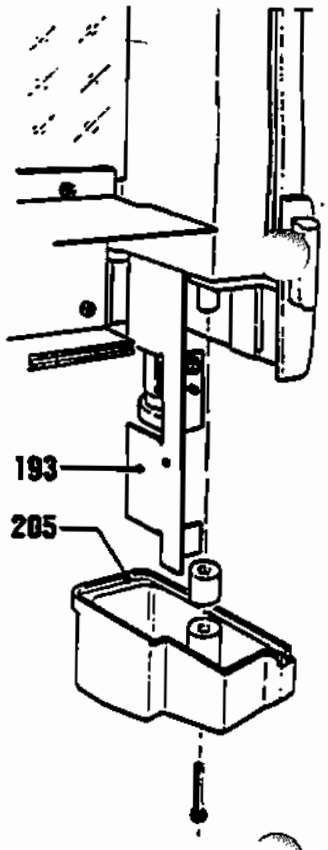

coinopmanuals.com

SPARE PARTS LIST for THE PERFORMER WALL

POS.	PART–No.	DESCRIPTION	DATA	QTY
	176 690	FRONT FRAME, ASSY	50 Hz	1
171	250 383	LONGITUDINAL PROFILE, LEFT		1
172	250 273	EDGE CONNECTOR, UPPER LEFT		1
173	250 275	EDGE CONNECTOR, LOWER LEFT		1
174	176 683	LAMP MASK		1
175	250 382	LONGITUDINAL PROFILE, RIGHT		1
176	250 274	EDGE CONNECTOR, UPPER RIGHT		1
177	250 276	EDGE CONNECTOR, LOWER RIGHT		1
174	176 683	LAMP MASK		1
178	176 663	CROSS PROFILE, UPPER ASSY		1
179	176 662	CROSS PROFILE, LOWER ASSY		1
180	115 082	HOLDING BRACKET, RIGHT		1
181	114 679	CLOSING PLATE, UPPER		1
182	114 680	CLOSING PLATE, LOWER		1
183	115 083	HOLDING BRACKET, LEFT		1
184	176 658	CARRIER PLATE, STAMPED		1
185	114 682	HOLDING BRACKET		2
186	250 340	TERMINAL PROFILE, UPPER CURVED		1
187	212 653	FRONT PLATE		1
	206 581	DUPLEX PRIFILE		1
188	176 974	COVER, TOP		1
189	173 710	COIN INSERT		1
190	175 023	BUTTON I, PRE–MOUNTED		1
	205 720	PRESSURE SPRING		1
191	176 591	HOLDING PLATE, LEFT		1
192	176 599	HOLDING PLATE, RIGHT		1
	226 038	FLUORESCENT LAMP	8 W	2
	212 685	COVER TUBE		1
	226 072	FLUORESCENT LAMP	4 W	4
	212 686	COVER TUBE		2
	209 970	FOIL	left	2
193	175 065	LAMP HOLDER, LEFT, PRE–MOUNTED		1
194	175 066	LAMP HOLDER, RIGHT, PRE–MOUNTED		1
	226 075	FLUORESCENT LAMP	13 W	2
195	214 020	FRONT GLASS		1
	206 519	RUBBER PROFILE		2
	206 520	RUBBER PROFILE		2
196	176 617	GLASS HOLDER, RIGHT		1
197	176 618	GLASS HOLDER, LEFT		1

coinopmanuals.com

SPARE PARTS LIST for THE PERFORMER WALL

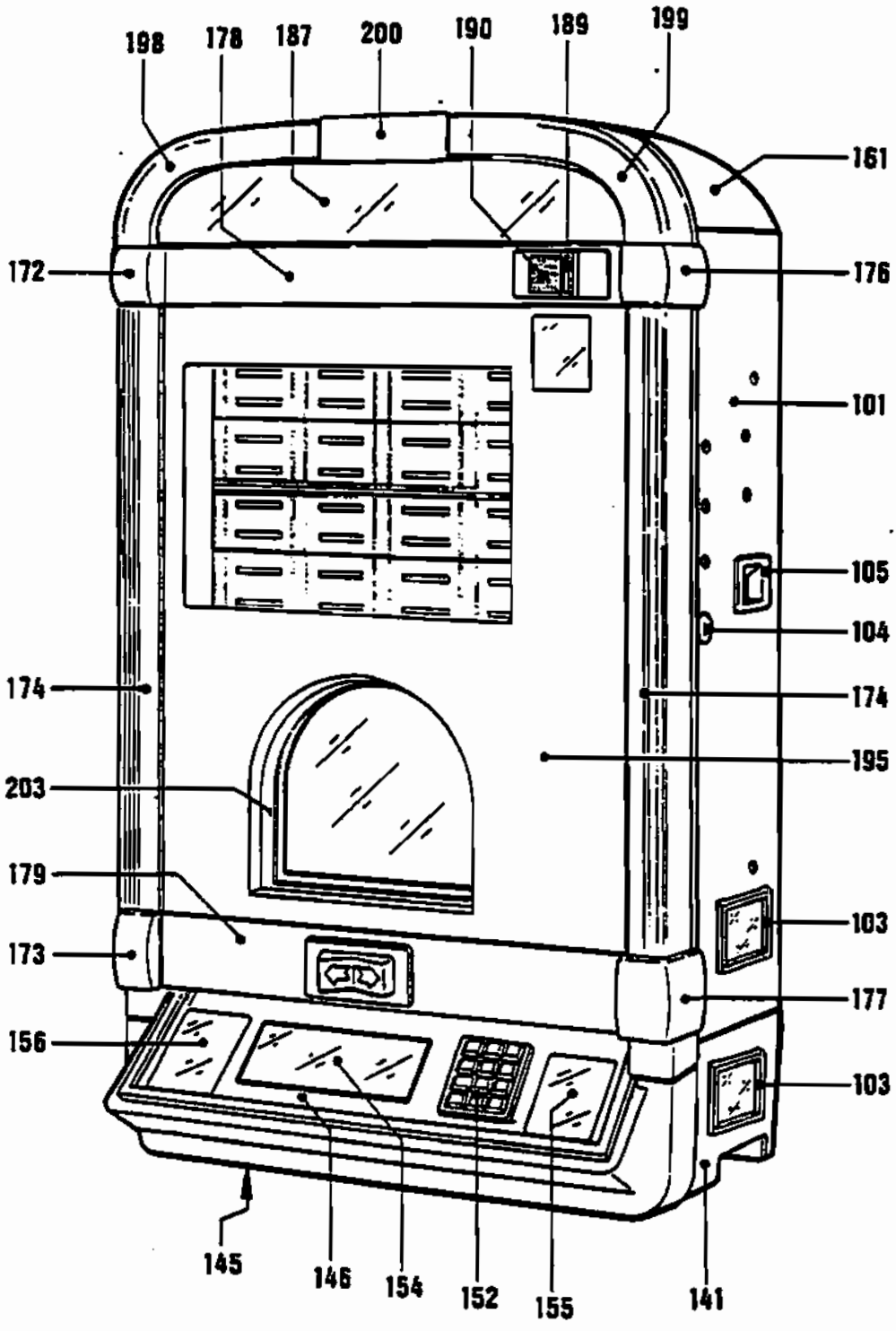

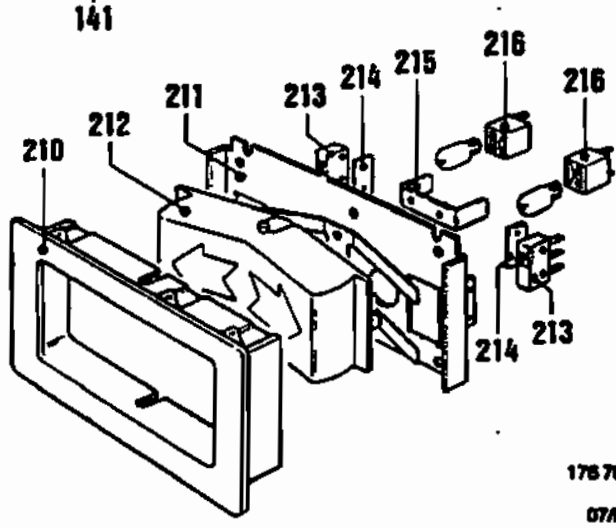

coinopmanuals.com

SPARE PARTS LIST for THE PERFORMER WALL

POS.	PART-No.	DESCRIPTION	DATA	QTY
198	176 684	LAMP MASK, UPPER LEFT, PRE-MOUNT.		1
199	176 687	LAMP MASK, UPPER RIGHT, PRE-MOUNT.		1
200	176 141	SOCKET for MASK		1
201	176 642	TUBUS		1
202	176 688	LIGHT ORGAN, ASSY	see page 133	1
203	212 648	MASK		1
204	176 700	LAMP HOLDER		1
	225 587	LAMP SOCKET		2
	226 056	LAMP	12 V 2 W	2
205	173 712	ADAPTER, LEFT		1
	173 711	ADAPTER, RIGHT		1

BUTTON

210	176 574	FRAME		1
211	176 661	COVER PLATE, STAMPED		1
212	175 974	BUTTON		1
213	222 547	SWITCH		1
214	176 008	HOLDING PLATE		1
215	175 937	LAMP HOLDER		1
216	225 587	LAMP SOCKET		2
	226 056	LAMP	12 V 2 W	2

coinopmanuals.com

SPARE PARTS LIST

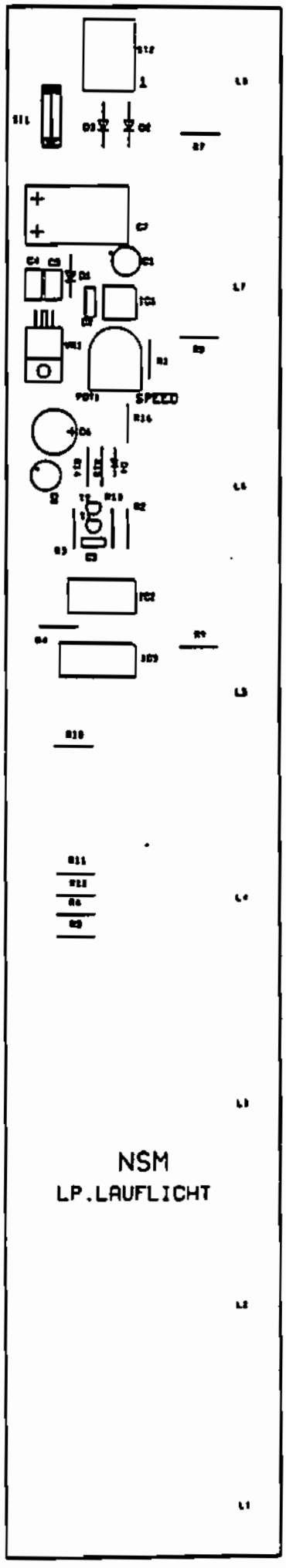

coinopmanuals.com

SPARE PARTS LIST for THE PERFORMER WALL

POS.	PART–No.	DESCRIPTION	DATA		QTY
	176 688	CB–LIGHT ORGAN, ASSY			1
ST 2	225 417	PIN PLUG	4 prongs		1
	225 689	FUSE HOLDER			2
SI 1	225 220	FUSE	2 A	250 V	1
IC 1	221 388	IC–LINEAR	NE 555		1
IC 2	231 443	IC–TTL	74 HCT 4094		1
IC 3	231 230	IC–LINEAR	ULN 2804 A		1
VR 1	221 573	IC–VOLTAGE	12 V / 1 A		1
T 1, 2	221 485	SI–TRANSISTOR	PNP BC 546 B		2
D 4	221 114	SI–DIODE	1 N 4148		1
D 1–3	221 115	SI–DIODE	1 N 4004		3
C 3	220 479	CER.–CAPACITOR	100 pF		1
C 2	220 344	CER.–CAPACITOR	22 nF		1
C 4, 5	220 332	MKT–CAPACITOR	0,33 µF		2
C 1	220 233	TAN–CAPACIOTR	4,7 µF	35 V	1
C 6	220 391	LYTIC	220 µF	25 V	1
C 7	220 165	LYTIC	470 µF	40 V	1
C 8	220 162	LYTIC	10 µF	63 V	1
R 14, 15	221 609	RESISTOR	220 KOhm	1/4 W	2
R 2, 16	221 029	RESISTOR	1 KOhm	1/4 W	2
R 1, 13	221 035	RESISTOR	10 KOhm	1/4 W	2
R 4	221 038	RESISTOR	47 KOhm	1/4 W	1
R 3	221 048	RESISTOR	100 KOhm	1/4 W	1
R 5–12	231 366	MET.–RESISTOR	10 Ohm	1/4 W	8
Pot 1	231 556	TRIMMER–RESISTOR	47 KOhm	0,15 W	1
	231 235	SHAFT			1
	225 533	LAMP SOCKET			8
	226 049	LAMP	12 V 2 W		8

coinopmanuals.com

SPARE PARTS LIST for THE PERFORMER WALL

POS.	PART-No.	DESCRIPTION	DATA		QTY
		CABLE HARNESSES			
	176 958	CENTRALE — CONTROL UNIT	15 prongs	120 lg	1
	176 956	CENTRALE — CONTROL UNIT	12 prongs	120 lg	1
	176 952	DISPLAY — CONTROL UNIT	10 prongs	1350 lg	1
	176 953	CENTRALE — OUTPUT STAGE	10 prongs	650 lg	2
	174 022	CENTRALE — MAINS TRANSFORMER			1
	176 386	KEY- and CABINET SWITCH			1
	175 223	CONTROL UNIT — CB-TITLE INDICATION			1
	176 957	CENTRALE — CD PLAYER	12 prongs	600 lg	1
	176 949	CONTROL UNIT — CD-PLAYER	8 prongs	600 lg	1
	176 945	CD-AUDIO	4 prongs	600 lg	1
	176 698	PULT-LIGHTING			1
	176 699	LIGHTING			1
	176 199	KEY BOARD — SIDE LIGHTING			1
	176 696	FLUORESCENT LAMP — CABINET			1
	176 978	BALLASTS	220 / 240 V		1
	176 336	MAINS WIRING	220 / 240 V		1
	222 542	SWITCH			1
	111 840	FUSE BOX, ASSY			1
	175 229	VOLUME CONTROL			1

coinopmanuals.com

SPARE PARTS LIST for THE PERFORMER WALL

POS.	PART-No.	DESCRIPTION	DATA	QTY
		PHONOGRAPH "THE PERFORMER WALL"	**60 Hz 100/127 V**	
		UNITS		
	176 327	CENTRALE ES V, ASSY	see page 600 ...	1
	171 702	OUTPUT STAGE, ASSY	see page 700 ...	1
		OPTION		
	175 119	LOCK (USA only)		1
	177 075	OUTPUT TRANSFORMER, ASSY		1
		CABLE HARNESSES		
	176 979	BALLAST		1
	176 337	MAINS WIRING		1
	176 696	FLUORESCENT LAMP — CABINET		1
	174 047	DOLLAR BILL ACCEPTOR — CONTROL UNIT		1
		CABINET		
101	175 866	CABINET, PRE-MOUNTED		1
104	206 903	CYL.-LOCK		1
	175 085	HOLDER		1
110	175 121	TENSION SPRING		1
112	216 085	DOLLAR BILL ACCEPTOR		1
	176 408	SERVICE PLUG, ASSY		1
		BOTTOM PART		
	224 256	BALLAST		1
	225 985	NOISE SUPPRESSION		1
154	173 794	GLASS, PRINTED	(middle)	1
155	176 673	GLASS, PRINTED	(right)	1
156	176 676	GLASS, PRINTED	(left)	1
		GUARD		
	224 254	BALLAST	120 V / 13 W	2
	224 256	BALLAST	120 V / 8 W	6
	176 695	**FRONT FRAME, ASSY**		
178	174 411	INSERT-DOLLAR BILL		1
	209 931	TRIMPLATE II		1

Coinopmanuals.com

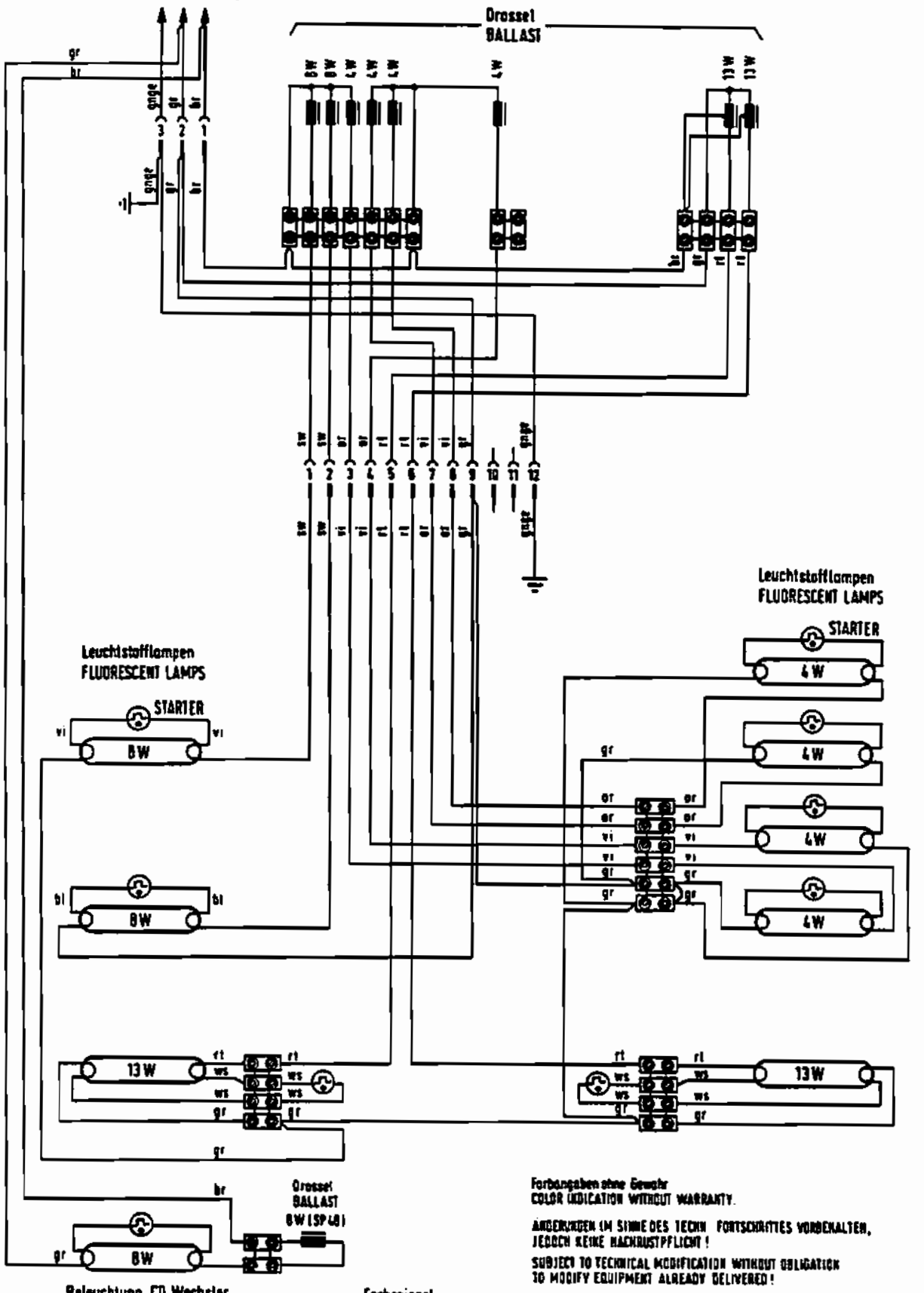

Farbangaben ohne Gewähr
COLOR INDICATION WITHOUT WARRANTY.

ÄNDERUNGEN IM SINNE DES TECHN. FORTSCHRITTES VORBEHALTEN,
JEDOCH KEINE NACHRÜSTPFLICHT!

SUBJECT TO TECHNICAL MODIFICATION WITHOUT OBLIGATION
TO MODIFY EQUIPMENT ALREADY DELIVERED!

Farbspiegel
COLOR CODE

ws	weiß	white
bl	blau	blue
br	braun	brown
ge	gelb	yellow
gn	grün	green
gr	grau	grey
or	orange	orange
rs	rosa	pink
rt	rot	red
sw	schwarz	black
vi	violett	violet

NSM MUSIKAUTOMATEN PHONOGRAPHS **ES V-CD** TECHNOLOGY

Schaltbild Beleuchtung [60 HZ]
WIRING DIAGRAM ILLUMINATION

THE PERFORMER WALL

Dat	Gez	Bearb	Gepr
26.09.92	Braun		

coinopmanuals.com

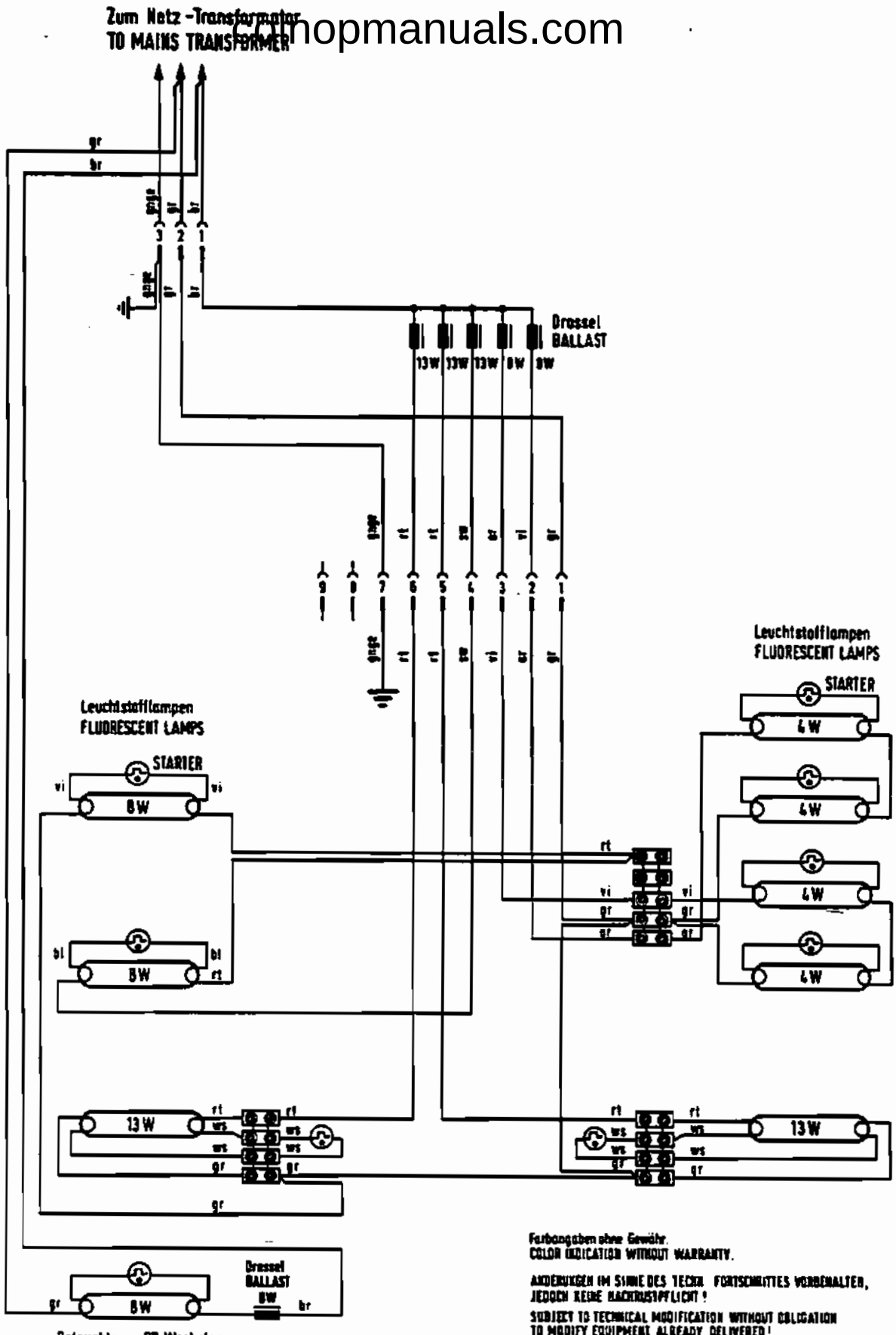

Farbangaben ohne Gewähr.
COLOR INDICATION WITHOUT WARRANTY.

ÄNDERUNGEN IM SINNE DES TECHN. FORTSCHRITTES VORBEHALTEN,
JEDOCH KEINE NACHRÜSTPFLICHT!

SUBJECT TO TECHNICAL MODIFICATION WITHOUT OBLIGATION
TO MODIFY EQUIPMENT ALREADY DELIVERED!

Farbspiegel
COLOR CODE

ws	weiß	white
bl	blau	blue
br	braun	brown
ge	gelb	yellow
gn	grün	green
gr	grau	grey
or	orange	orange
rs	rosa	pink
rt	rot	red
sw	schwarz	black
vi	violett	violet

NSM MUSIKAUTOMATEN PHONOGRAPHS **ES V-CD** TECHNOLOGY

Schaltbild Beleuchtung [50 HZ]
WIRING DIAGRAM ILLUMINATION

THE PERFORMER WALL

Dat	Ges	Bearb	Gepr
15.09.92	Braun		

coinopmanuals.com

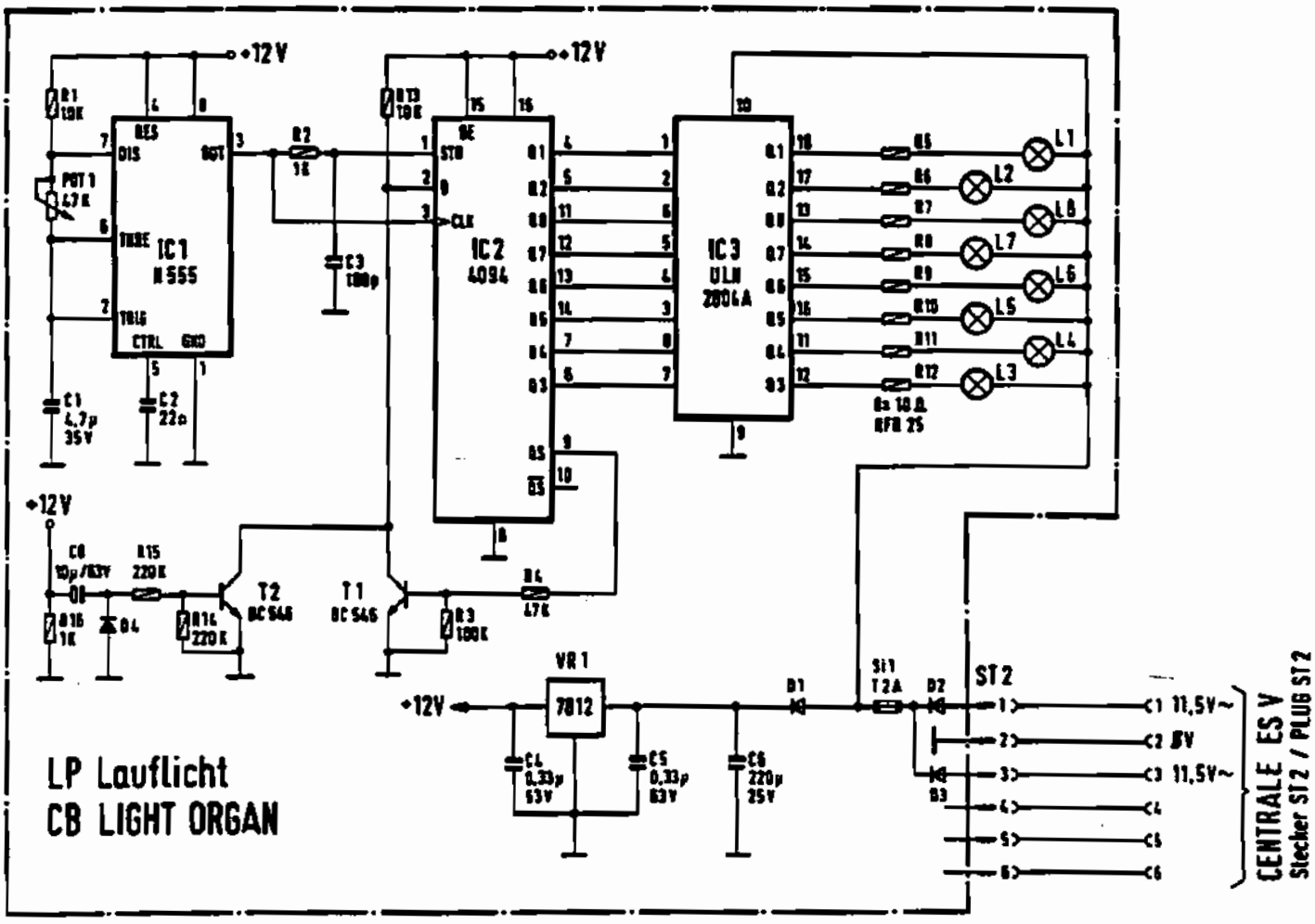

1N4148

1N4004

½W

Draufsicht: Spannungsregler VR1
TOP VIEW: VOLTAGE REGULATOR VR1

von unten gesehen
BOTTOM VIEW

Sicherungen nur durch solche mit gleichen Werten ersetzen.
REPLACE FUSES ONLY BY THOSE OF THE SAME VALUE.

ÄNDERUNGEN IM SINNE DES TECHN. FORTSCHRITTES VORBEHALTEN, JEDOCH KEINE NACHRUSTPFLICHT!
SUBJECT TO TECHNICAL MODIFICATION WITHOUT OBLIGATION TO MODIFY EQUIPMENT ALREADY DELIVERED!

NSM MUSIKAUTOMATEN PHONOGRAPHS **ES V-CD** TECHNOLOGY

Schaltbild
WIRING DIAGRAM

Lauflichtsteuerung
LIGHT ORGAN CONTROL

THE PERFORMER WALL

Dat.	Gez.	Gesch.	Gepr.
25.09.92	Braun	[signature]	[signature]

cpcrepmanuals.com

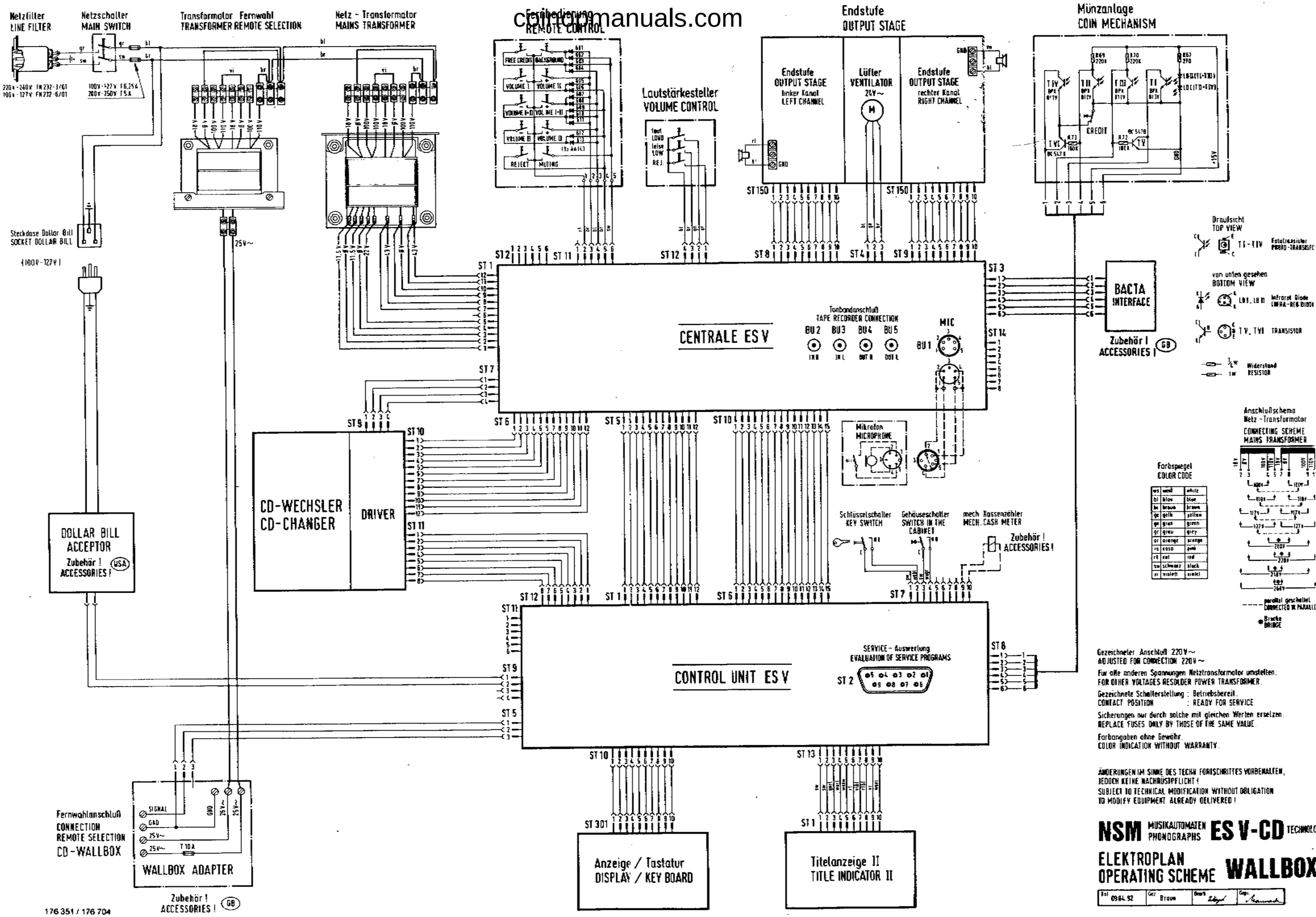

Gezeichneter Anschluß 220V~
ADJUSTED FOR CONNECTION 220V~

Für alle anderen Spannungen Netztransformator umstellen.
FOR OTHER VOLTAGES RESOLDER POWER TRANSFORMER.

Gezeichnete Schalterstellung : Betriebsbereit.
CONTACT POSITION : READY FOR SERVICE

Sicherungen nur durch solche mit gleichen Werten ersetzen.
REPLACE FUSES ONLY BY THOSE OF THE SAME VALUE.

Farbangaben ohne Gewähr.
COLOR INDICATION WITHOUT WARRANTY.

ÄNDERUNGEN IM SINNE DES TECHN. FORTSCHRITTES VORBEHALTEN,
JEDOCH KEINE NACHRÜSTPFLICHT !
SUBJECT TO TECHNICAL MODIFICATION WITHOUT OBLIGATION
TO MODIFY EQUIPMENT ALREADY DELIVERED !

NSM MUSIKAUTOMATEN PHONOGRAPHS **ES V-CD** TECHNOLOGY

ELEKTROPLAN
OPERATING SCHEME **WALLBOX**

Tel	Gez	Bearb	Gepr
09.04.92	Braun		

176 351 / 176 704
176 352 / 176 705 / 176 598
176 353 / 176 706
07/93

coinopmanuals.com

OPERATING INSTRUCTIONS

FOR NSM–PHONOGRAPHS

ES V–CD TECHNOLOGY

to
Technical Information, Assy

176 393	THE PERFORMER GRAND II
176 352	THE WIZARD/ OLD FASHION WIZARD
176 514	THE PERFORMER CLASSIC
176 610	CD HIDE–AWAY II
176 598	FIREBIRD II
176 705	THE PERFORMER WALL

N S M
Aktiengesellschaft
Saarlandstraße 240
55411 Bingen am Rhein

2

Page 201–211

coinopmanuals.com

INDEX

1 PLAYING SEQUENCE
1.1 Operation after switching on
1.2 Standby
1.3 Credits
1.4 Title display
1.5 Selection
1.6 Play mode
1.7 Advertising
1.8 Lock out titles
1.9 Happy-Hour Credits
1.10 Service and Maintenance

2 ADJUSTMENTS WITH REMOTE CONTROL
2.1 Volume controls
2.2 Muting
2.3 Free credits
2.4 Background music
2.5 Key switch

3 PROGRAMMING OF PRICE- AND MONETARY VALUE SETTINGS

4 CD CHANGE / CASH COLLECTION

coinopmanuals.com

SELECTOR and DISPLAY PANEL

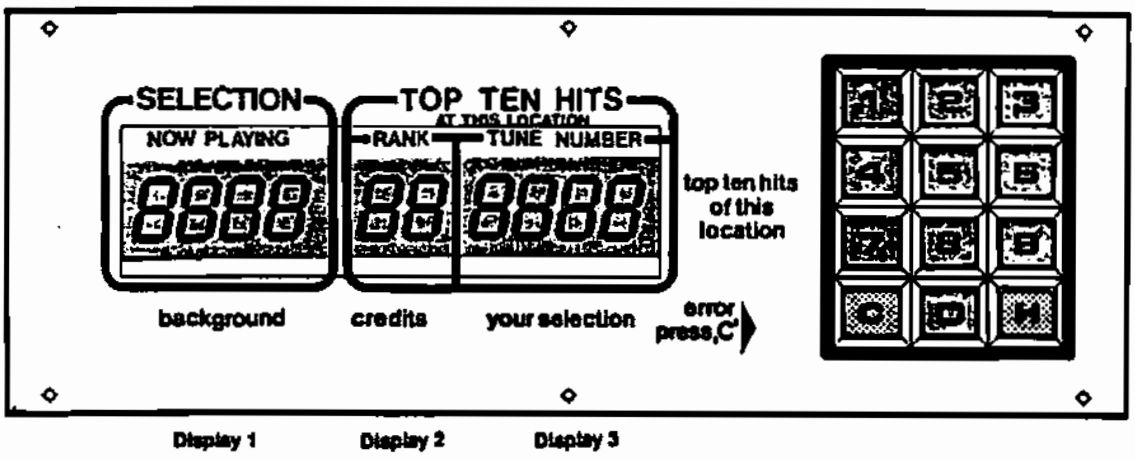

1 PLAYING SEQUENCE

The functional sequence, starting with "power on", standby credit, selection and playing of selected title to the rest position is described below.
The technical assembly and the working together of the components can be seen in the "electronic schematics". Compare the descriptions with the illustration of the display / keyboard above.

1.1 Operation after Switching on

Immediately after switch–on the memory components –on the CONTROL UNIT– and all preprogrammed values are checked.
Display 1 shows then for 2 sec. the program index
If an error is found during checking, error display Er xx is then shown for 2 sec.
With Er 31 (unverified memory contents) and Er 40 (price settings incorrect) Display 1 shows the correct program step with Pxxx which needs to be reprogrammed. See programming manual.
With other Er–numbers in display 3, even during operation, proceed according to the instructions in "Trouble Shooting".

1.2 Standby

Hit display:
The microprocessor of the CONTROL UNIT finds out the ten most played titles of the 30 titles just played before (at this phonograph).
On Display 3 the title numbers of the 10 most popular titles, whose rankings (1–10) are shown on Display 2, are changed in intervals of 2 sec. Also the lamp "top ten hits" lights up.
When pushing "H", the hit display can be stopped for 16 sec; every press the key "H" causes an advance to the next hit.
Note: When the popularity counters are erased (program step P033), the hit parade is erased too. In that case "0" appears for ranking until records are played again.

coinopmanuals.com

Autoplay mode:
A time interval can be set by programming the command group P 11x for playing of incentive titles.

Conditions for an incentive title to be played:
- Phonograph in standby mode
- No credit available
- Microphone switch not being used
- No muting

1.3 Credits (not for HIDE–AWAY)

See unit description "Coin and Bill Validation".

After insertion of a coin the hit display is interrupted, lamp "10 top hits" goes off and lamps "credit" and "your selection" light up. Display 2 shows the number of credits.
For every selection credit is deducted.
If not enough credits are available for the selection, the lamp "credit" flashes.
If no more coins are inserted within 16 sec. or no selector key is pressed, the mode changes to "hit display".
Free–credit switch (add. key), below the mechanical coin acceptor or on the adapter PCB with electronic coin validators, is only possible when the cabinet lid is open and the cabinet interlock switch is in service position (press add. button once = 1 credit). These credits are not registered statistically.
Attention! The machine is furnished with an interlock switch which must be manually set in service position (pull out). The switch resets automatically when closing the lid.
Note: Credits remain stored during "power off/on" (P049 = 0).
If the computer detects no activity on the phonograph within a time, the stored credit is cancelled (P049 = time).

1.4 Title display

By pushing the keys respectively title holders are moved into the corresponding direction. Upon each key operation two new CD–covers including titlestrips are shown. In case of a limitation of selectable CDs by programming P042 only the corresponding title holders are shown.
Note: A problem with the title display will initiate error code "Er 9x". Following instructions in "Trouble Shooting".

1.5 Selection

Title Selection: The four–digit number of the desired title has to be entered (2 digits each for CD–No. and title). "Credit" and "your selection" light up. The selection can be corrected by pressing "C" up to 2 sec. after pressing the 4th digit.

Album Selection: When entering Track 00, all titles of a CD are automatically played (i.e. 0300 = all titles of CD 03).

coinopmanuals.com

With open cabinet switch (interlock lever pulled out) no credit is deducted when selecting. If the entry is incorrect, e.g. higher than the programmed number of CD titles which can be selected or an unallowed selection of albums, "error" flashes. In that case, press "C" and repeat the selection.
One credit is deducted for each selection of a title. With album selections credits are deducted as per the programming in program step P066. When programming "0", album selection is blocked. If there is not enough credit available, "credit" lamp flashes.
16 sec. after selection "hit display" is switched on automatically again.
Note: If a background or incentive title is playing during selection, the volume is fading and the selected tune is being played.

1.6 Play Mode

After selection of a title the CD which is to be played corresponding to the entries in the selection storage is transported to the player and then played.
Just before start the number of the title is shown on Display 1 ("selection now playing"). After the disc is played, the display is erased and the CD is transported back to its magazine space.
Note: If a error occurs with the CD changer or the player, "Er 7x" or "Er 6x" appears for 2 sec. In that case proceed according to the description in "Trouble Shooting".

Limiting playing time for a title (track)
By programming P045 the time that a title is to be played maximum can be set in minutes.
After expiration of this time the volume for that title is fading and then muted.
When setting "0" (default), there is no limit in playing time.

Sequence of tunes playing
By programming P046 one can set in which sequence the selected titles are played.
Settings: 0 = in sequence of selection (FIFO)
1 = in numerically increasing sequence
2 = random sequence

Limit of Playing Titles on the same CD
One can set by programming P047 how many titles can be played consecutively on the same CD.
With 0 (default) there is no limit.

Attention!
When playing a test compact disc, the description that comes with the test disc is to be exactly adhered to.
By any means, it is to be avoided to give sine signals with peak signal "0dB" at full volume level to the loudspeakers for more than 1 sec.
But also other unfiltered noises and high-frequency signals (which are only used for measuring purposes) can damage the amplifier and loudspeakers at full volume.
When checking channel separation, it is to take in consideration if the box is not switch to "Mono-mode" (see page 110).

coinopmanuals.com

1.7. Advertising

With the commands of group 12x it is possible to define timeslices for playing special CD's containing advertising information (ad).
While the ad–mode is active a title is played every x minutes (x ist the time defined in P124) after closing the currently played title. The CD's containing ad can be selected for "not to be played by normal customers" (P126).

1.8 LOCK–OUT TITLES

If one titles of a CD is bad it can be locked out for a defined time at every day by programming the steps in group P13x.

A lock out title can be defined by
- bad quality of reproduction
- bad track within the title
- shocking information.

1.9 Happy–Hour Credits

For additional animation of the audiance, a so called Happy–Hour can be programmed to be active at several days.
While active an additional bonus credit is given if the customer has payed a number of credits (defined as calculation number in P144). I.e. After 5 payed credits one Happy–Hour credit is given if the calculation number is programmed as 5. The programming of Happy–Hour is done with the P14x group of commands. See also descriptions in chapter 3.

1.10 SERVICE and MAITENANCE

With the commands of groups 15x and 16x you can

- read out errors of the phonograph with CD and date of appearence,
- test the CD changer,
- test the CD played,
- test the lamps and keys,
- install new CDs
- remove bad or not actual CDs.

Refer to "Programming of the phonograph" and "Trouble shooting"

coinopmanuals.com

2 ADJUSTMENTS WITH REMOTE CONTROL

The phonograph can optionally be equipped with cable–type remote control or infra–red remote control. All functions and the operation of both models are identical. Therefore, this description is valid for both of them.

The button–control box attached to the rear of the cabinet allows common control of both channels "+" or "–" and "REJECT".
Information about the functions of different controls is presented in the unit description "Remote Control".

2.1 Volume Controls

We differentiate between two volumes:
- The "normal volume" of selected titles and random play titles
- The "background volume" of background titles

For selected titles and random titles or with microphone and tape mode the corresponding volume is adjustable; background volume only with background mode. The keys have the following meaning:
- Key "I" for the left channel
- Key "II" for the right channel
- Key "+" for increase volume
- Key "–" for decrease volume

When pushing the center key "I+II" the channels are regulated together. If they were differently set, they are first "balanced" and regulated together.
When no selection is taking place, the volume for the channels is shown on display 3 during the adjustment in steps of "1" to "31".
While "Muting" is active the message "OFF" appears in display 1. No more titles will be played until "Muting" is cancelled.
The last volume set is stored during "power off".
The maximum possible volume for normal and background mode can be limited by programming P051 and P052 in steps of "1" to "31".

Note: To protect the amplifiers a check is made whether an overload occurs due to mismatching.
Upon recognition of an error the volume of the corresponding channel is reduced step by step automatically by the computer until a non–critical point is reached.

2.2 Muting

The volume of both channels can be set to "0" by pressing the key "MUTING". The message "OFF" appears on display 1. An other pressing of the key "MUTING" or pressing one of the "VOLUME +" keys causes the system to switch back to the previously set volume for both channels.

Note: With display "OFF" no more records are played until "Muting" is cancelled.

2.3 Free Credits

With an "open" key switch (optional device) free credits programmed in program step P094 can be called up.
The following free credits are possible depending upon the settings in step P094:
- Number of set free credits can be called up individually step by step.
- Unlimited free credits can be called up individually step by step.
- Permanent credit when pressing key "FREE CREDIT" for the first time (credit display "99").
  When key "FREE CREDIT" is pressed again, permanent credit is blocked.
- Permanent credit automatically within the time window.

Using the program steps P091 to P093 a time window can be defined. While this time window is active one can call up free credits.
If no key switch is installed and also no time window is defined one can call up any number of free credits.

coinopmanuals.com

2.4 Background Music

When the key switch is "open" the background mode can be switched on with the BACKGROUND key. "Background playing" lights up.
When pressing this key again, the background mode is switched off. In the background mode "random" records are played as defined in P105. The time when background musik is played is to set in P10x.
The records are played at a "specific" background volume which can be changed as desired during playing.
A "normal record", selected while background music is playing, interrupts the background disc and the selected tune is played at "normal volume".

2.5 Key Switch (optional)

A key switch at the rear side of the cabinet or at the side wall serves as protection against unauthorized calling up of the functions:

- free credits
- switching on the background mode

In position "key switch locked" settings from the remote control are disregarded.
The position "key switch open" permits programmed free credits to be called up and the background mode to be switched on.

When the key switch is not installed, that means the same as position "key switch open".
This also permits programmed free credits to be called up and the background mode to be switched on. If this is not desired the function generally can be locked or only be actived while a programmed time window becomes active.

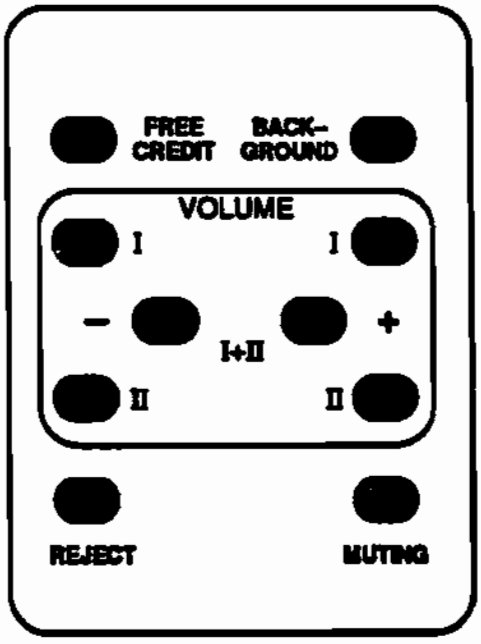

Remote control

coinopmanuals.com

3 PROGRAMMING PRICE– AND MONETARY VALUE SETTINGS

This description is a summary of a section of the service program.
A detailed description and the corresponding tables are contained in chapter "Price Settings" and "Monetary Value Settings" in the programming manual.

Practical example for setting the "price settings" and the "monetary value settings":

1 play = 50 p
2 plays = 50 p
5 plays = 1 $ (1 £)

Programming of price settings:

Programming information	Operation	Displays 1	2	3
Switch–over from play mode to service mode	pull out plunger	P010	xx	xxxx
	Press key(s)		Play	price
Entering command mode	"C"	P		
Direct selection of a command, Display of previous setting in P061.	"61", "H".	P061	xx	xxxx
New setting in P061 "1 play/50 p".	"01", "0050", "H".	P061	01	0050
Advance to next command, Display of previous setting in P062.	"H"	P062	xx	xxxx
New setting in P062 "1 plays/50p".	"01", "0050", "H".	P062	01	0050
Advance to next command, Display of previous setting in P063:	"H"	P063	xx	xxxx
New setting in P063 "5 plays/1 $.	"05", "0100", "H".	P063	05	0100
Advance to next command, Display of previous setting in P064:	"H"	P064	xx	xxxx
For only 3 classes setting "00 0000".	"00", "0000", "H".	P064	00	0000
Advance to next command, Display of previous setting in P065:	"H"	P065	xx	xxxx
For only 3 price classes setting "00 0000".	"00", "0000", "H".	P065	00	0000

Caution! Press "C" key in the event of incorrect programming or when display flashes.

Press "C" key twice or close hood to return to standard program (play mode).

coinopmanuals.com

Example of Programming the monetary value settings:

Depending on the type of coin validator the individual coin channels must be programmed for the associated monetary values in the corresponding program steps. Unused channels must be programmed with the monetary value "0"!
See also chapter 3: "Programming of monetary value settings" and chapter 10: "Electr. coin– and bill acceptor".

Checking the monetary value settings: Select one program step between P071 and P075. After inserting a certain coin the channel associated with the coin is displayed, e.g. 50 pence in channel 2: Display P072 0050.

Changing the monetary settings: As an example, the 20 pence slot (channel 1) is not to be used: First enter program step P071 as described above. In the coin acceptor or on the adapter PCB of electronic coin validators the respective channel has to be blocked also so that these coins drop into the coin return.

Standard settings: The programming of standard settings is done with the command P070 and entering the number of the desired table values (see table "Monetary-value settings" in the chapter "Programming of the phonograph"). The correct programming of all channels is done automatically after entering the number and pressing the key "H".

Programming information	Press keys	Displays 1 2 3
Direct selection of a command, Display of previous setting in P071.	See text.	P071 xxxx
New setting; no coin conversion	"000", "H".	P071 0000
If the standard setting according to the table is to be used thereafter, call up program step P070 (as described previously).		
Ready for standard setting P071 through P075	See text.	P070
Program standard table 1.	"1", "H".	P070 1

Press "C" key twice or close cabinet hood and return to standard program (play mode).

coinopmanuals.com

4 CD CHANGE / CASH COLLECTION

- Open machine and activate cabinet switch (pull out plunger) to enter into service mode. Display 3 automatically shows the least played CD.
- By pressing "1" successively, the next best CD is shown each time.
- Unlock magazine, swing out; pull out the corresponding CD holders to change CD's. After changing push back CD holders until they lock in.
- The title information of the new inserted CD must be recognized to the juke box by calling the command P161. You also may call-up P160 if you have finished the service.
- Change corresponding title cards, unlock flip-chart unit and flap down. Get desired program tables in position with the button on the PCB of the right-hand side of the unit.
- Read counters:
  P013 = Cash total
  P016 = Counter for plays
  P017 = Number of selected titles
  P018 = Number of selected albums
  P019 = Number of overplay titles
  P020 = Number of payed credits
  P021 = Number of free credits provided
  P022 = Number of background titles played
  P023 = Number of autoplay titles
  P024 = Number of advertisement titles
  P025 = Number of Happy-Hour credits
- Erase counters: P033, and selected code number.
- After service is finished call-up P160.
  The read-in of all CD title information is done also while the cabinet is closed. If the read-in was completed the programm automatically returns to the normal play mode.

  For more information see chapter 3 "Programming the phonograph.

coinopmanuals.com

PROGRAMMING OF

FOR NSM–PHONOGRAPHS

ES V–CD TECHNOLOGY

to
Technical Information, Assy

176 393	THE PERFORMER GRAND II
176 352	THE WIZARD/ OLD FASHION WIZARD
176 514	THE PERFORMER CLASSIC
176 610	CD HIDE–AWAY II
176 598	FIREBIRD II
176 705	THE PERFORMER WALL

N S M
Aktiengesellschaft
Saarlandstraße 240
55411 Bingen am Rhein

3

Page 301–330

coinopmanuals.com

Table of contents

Main Menu **303**

Programming Table for NSM Phonographs 304

1. Authorization of P001 to P002 ..... **305**

2. Statistics P010 to P029 ..... **305**

3. Data Transfer/Cancellation! P030 to P033 ..... **308**

4. General Settings P040 to P054 ..... **310**

5. Price Setting P060 to P066 ..... **314**

6. Monetary Value Setting P070 to P077 ..... **316**

7. Programming Real Time Clock P080 to P082 ..... **318**

8. Programming Free Credits P090 to P094 ..... **320**

9. Programming Background Music P100 to P107 ..... **321**

10. Programming Auto Play P110 to P117 ..... **322**

11. Programming Advertising P120 to P127 ..... **323**

12. Blocking certain titles (lock–out) P130 to P135 ..... **324**

13. Programming Happy–Hour Credits P140 to P144 ..... **325**

14. Calling up Test Programs P150 to P164 ..... **326**

14.1 Test Programs for Service Operation 326
14.2 Recording title quantities in title memory 330

Overview of tables used

Table 1: "Overview Commands of Sercive Program" 303
Table 2: "Price Setting" 314
Table 3: "Monetary Value Setting" 317
Table 4: "Error Codes" 327
Table 5: "Assignement of bit numbers to the input ports" 328
Table 6: "Port numbers of the input ports" 328

coinopmanuals.com

PROGRAMMING OF PHONOGRAPHS

Main Menu

In order to program NSM phonographs in a simple yet extensive fashion, a service program has been installed with which the different settings can be altered via the keyboard of the phonograph.
In order to get to operating mode "programming", the following steps must be taken:

Opening of cabinet lid (door) and
pulling out service switch (cabinet interlock switch).

By changing the display, the phonograph indicates that it is in operating mode "programming". The display shows the following text:

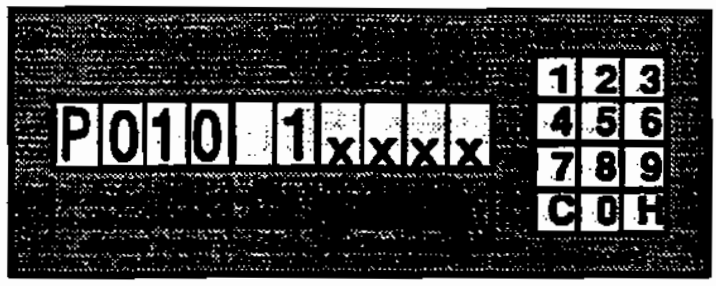

Illustration: "Display after calling up command mode"

The display "popularity" shows the least played CD. When pressing "C", the display is cancelled. To the left the letter "P" appears. Now enter the desired command number. Zeros before the number can be left out. Pressing "H" confirms the entry.
For example:

Enter: P 40 H 1 H to program the phonhgraph with all default values.

In order to find single commands easier, all possible commands are put together in single groups. Compared to their predecessors, the programming of machines with ES–V technology is much more extensive. The commands of Groups 1 to 6 and 14 have previously existed, but have been revised. The commands in Groups 7 to 13 have been added. By integrating a real time clock, the phonograph has been equipped with some very interesting new commands. Thus, the phonographs have become even more attractive.

In Table 1 "Overview of Commands of the Service Program" the 14 command groups existing now are listed.

Table 1: "Overview of Commands of the Service Program"

Group	Name of Command Group	Command Numbers
1	Authorization	P001...P002
2	Statistics	P010...P026
3	Data Transfer/Cancellation	P030...P033
4	General Settings	P040...P054
5	Price Setting	P060...P066
6	Monetary Value Setting	P070...P076
7	Programming Real Time Clock	P080...P082
8	Programming Free Credits	P090...P094
9	Programming Background Music	P100...P107
10	Programming Auto Play	P110...P117
11	Programming Advertising	P120...P127
12	Lock–out of Different Titles	P130...P135
13	Programming Happy–Hour–Credits	P140...P144
14	Test Programs	P150...P164

The following "Programming table for NSM–phonographs" lists all commands possible with this service program. When entering the respective command number, one can eliminate the leading zeros. A command called up in error can be cancelled by pressing "C".

Table of Programs for NSM Phonographs with ES V–Technology

coinopmanuals.com

P001	Authorization: Enter code: "PPPP"	P031*	Datatransfer to DATA PRINT in graphic mode 0– all available data	P063*	ditto for chute 3	P103*	Active on weekday(s) "x" (x = 1 to 7) (0=no,1=yes)+H	P140*	Program Happy–Hour–credits: 0+H– default; no Happy–Hour
P002*	Change authorization code "PPPP"		1– Cashbox 2– Counter with cashbox	P064*	ditto for chute 4	P104*	Lock for background music (BGM): "1" 0– No BGM	P141*	Start time for time window "Happy–Hour"
	Statistics:		3– General settings 4– Popularity of all CDs	P065*	ditto for chute 5		1– BGM possible in time window 2– BGM automatically in time window	P142*	Stop time for time window "Happy–Hour"
P010	0– No. of least played CD 1– No. of second–least played CD		5– Top 30 hits 6– Previous 20 error reports	P066*	Bonus listing for album selection "1" 0– No album selection allowed	P105*	Entry of 20 titles or albums Enter: nnnn+H	P143*	Active on weekday(s) "x" (x = 1 to 7) (0=no,1=yes)+H
	2– Number of plays 3– Data about any CD	P032*	Option		1– No bonus 2– 1 bonus for 5 Titles	P106*	Patron Selection (0=free, 1=locked for guests)	P144*	Calculation number (n=1 to 6) Enter:n+H (0= no Happy–Hour)
P011	0– No. of the most played (least) CD 1– No. of the second–last CD	P033*	Cancellation routines! 0+H– Cancels all memories!		3– 1 bonus for 4 Titles 4– 1 bonus for 3 Titles	P107*	Sequence of play (0=FIFO, 1=RANDOM) "0"		
	2– Number of plays 3– Data about any CD		1+H– Cancels top 30 hits! 2+H– Cancels popularity!						
P012	0– Top–title, Hit #1 1– Second–best title		3+H– Cancels counters and cashbox! 4+H– Cancels credits!	P070*	Monetary value settings: see table "Monetary value settings"	P110*	Programs auto play: 0+H– default;cancels entries + time		CALLING UP TEST PROGRAMS:
P013*	0– Cash amount since last evaluation 1– Accumulated Cashbox amount		5+H– Cancels all selection memories! 6+H– Cancels all error report memories!		0+H– Cancels previous monetary value n+H– Selection "n" from table (n.a.)	P111*	Start time for time window "Auto Play"	P150	Read out error report memory: 0– Last reported error
P014*	0– Number of coins through Chute 1 (K1) 1– Number of coins through Chute 2 (K2)			P071*	Arbitrary monetary value setting f. chute 1 zzzz=coin value (0600=6 S,–) "zzzz"	P112*	Stop time for time window "Auto Play"		1– Previous error report 2– CD–Nr. at which the error occured
	2– Number of coins through Chute 3 (K3) 3– No. of coins through K4 or bills NP1	P040*	General settings: 0+H Default values for 41 to 64, 77, 94	P072*	ditto for chute 2	P113*	Active on weekday(s) "x" (x = 1 to 7) (0=no,1=yes)+H		3– Time of occurence 4– Date of occurence
	4– Number of bills through validator NP2 5– Accumulated counter for K1		1+H Default values for 41 to 64, 77, 94 104, 107 and 114, 117	P073*	ditto for chute 3	P114*	Time between two titles in minutes Enter: nn+H (0=no auto play) "15"	P151	0– Continuous run 1: all CDs played for 15 sec. each
	6– Accumulated counter for K2 7– Accumulated counter for K3	P041*	Define machine code number, maximum 4 digits "0"	P074*	ditto for chute 4	P115*	Entry of 20 titles or albums Enter: nnnn+H	P152	0– Selected CDs played for 15 sec. each Enter: nnnn +H
	8– Accumulated counter for K4 or NP1 9– Accumulated counter for K5 or NP2	P042	Selection limit for CD/TRACK (title) max. 100CDs, 99 tracks "0099"	P075*	ditto for chute 5	P116*	Patron Selection (0=free, 1=locked for guests)	P153	0– Continuous run 3: All CDs are placed in the lift, but not played
P 015*1)	0– Cash amount of refill box 1– Accumulated Cashbox amount	P043	Light show in stand–by, if installed "1105"	P076*	Bonus credits for bill insert "0"	P117*	Sequence of play (0=FIFO, 1=RANDOM) "1"		1– Continuous run 4: 6 CDs are continuel ly played for 15 sec (1,25,50,51,75,00)
P016*	0– Counter of played titles 1– Accumulated counter	P044	Light show in operation, if installed "1000"	P077*	0– Indirect revaluation 1– direct revaluation "0"				2– Continuous run 5: 2x cont. run 3, thereafter repeated cont. run 4
P017*	0– Counter of selected titles 1– Accumulated counter	P045*	Time limit for play in minutes for one title (0=no limit) "0"			P120*	Program advertisement play: 0+H– default;cancels entries + time	P155	0– Lamp test (F6): Stop with key "C"
P018*	0– Counter of album selections 1– Accumulated counter	P046	Sequence of play for normal selections (0/1/2) "0 (FIFO)"	P080*	Program real time clock: Set time "hhmm"	P121*	Start time for time window "Advertisement"	P156	0– Input test (F7): Stop with key "C"
P019*	0– Counter of overplay titles 1– Accumulated counter	P047	Maximum number of titles in a sequence from one CD (0 = no limit) "0"	P081*	Set date "ddmmyy"	P122*	Stop time for time window "Advertisement"	P157	0– manual control of the CD–changer Stop with key "C"
P020*	0– Counter for paid credits 1– Accumulated counter	P048	Automatic advancing of title display in minutes (0= none) "0"	P082*	Set week–day (d=1 to 7) "d"	P123*	Active on weekday(s) "x" (x = 1 to 7) (0=no,1=yes)+H		Stop the continuous runs always with the cabinet switch!
P021*	0– Counter for free credits 1– Accumulated counter	P049*	Cancels credits after power off/stand–by (n=0–no, 1 to 240–yes) x10 hrs. "2"	P090*	Program free credits: 0+H– default; cancels entries + time	P124*	Time between two titles in minutes Enter: nn+H (0=no adverts)		Title memory:
P022*	0– Counter for background titles 1– Accumulated counter	P050*	Cancels selection memory after power off (n=0–no, 1 to 240–yes) x10 hrs. "2"	P091*	Start time for time window "Free Credit"	P125*	Entry of 20 titles or albums Enter: nnnn+H	P160	0– Read in all CD titles i.e. with initial equipping of all CDs
P023*	0– Counter for autoplay titles 1– Accumulated counter	P051*	Maximum volume in play operation (max. 31) "31"	P092*	Stop time for time window "Free Credit"	P126*	Patron Selection (0=free, 1=locked for guests)	P161	Read in the titles of one newly equip–ped CD. Enter CD# "nn"+H
P024*	0– Counter for advertising tracks 1– Accumulated counter	P052*	Maximum volume for background music (max. 31) "16"	P093*	Active on weekday(s) "x" (x = 1 to 7) (0=no,1=yes)+H	P127*	Sequence of play (0=FIFO, 1=RANDOM)	P162	Read the title memory 0– Number of titles from first CD
P025*	0– Counter for Happy–Hour–credits 1– Accumulated counter	P053	Set volume "0606"	P094*	Number of free credits: 0: No free credits "0"				1– Number of titles from the next CD 2– Number of titles from the last CD
P026	reserve	P054	Set treble and bass "0606"		<200: No. of free credits individually used =200: Unlimited use	P130*	Lock–out certain titles: 0+H– default;cancels entries + time		3– Number of titles from any CD Enter CD # "nn"+H
P027	reserve				=201: Switch between non/unlimited use =202: automatically unlimited use	P131*	Start time for time window "Free title selection"	P163	Cancels title memory of all CDs 0+H– all entries = 1
P028	Number of unused credits	P060*	Price settings: see table "Price settings"			P132*	Stop time for time window "Free title selection"		
P029	Number of selections not yet played		0+H– Cancels previous price setting n+H– Selection "n" from table (n.a.)	P100*	Program background music: 0+H– default;cancels entries + time	P133*	Active on weekday(s) "x" (x = 1 to 7) (0=no,1=yes)+H	P164	Switch signal sources: (only necessary when servicing)
		P061*	Arbitrary price setting for chute 1 xx=selections, yyyy=price "xx yyyy"	P101*	Start time for time window "Background music"	P134*	Activate lock: 1– Title locked 0– Title in time window available		0+H– Mute (no signal source) 1+H– CD–player
P030	Datatransfer to DATA PRINT in textmode 0– cashbox,counters,popularity,errors,..	P062*	ditto for chute 2	P102*	Stop time for time window "Background music"	P135*	Entry of 20 titles or albums Enter: nnnn+H		2+H– Tape or cassette player 3+H– Microfone

1) not yet implemented "Values" = factory settings input of authorization code necessary

coinopmanuals.com

1. Authorization P001 to P002

Because the jukeboxes can be programmed with so many important data as well as input in cash counter and statistics, it is even more important than before that only authorized personnel may have access. For this reason access to essential data of the phonograph can be protected by using an authorization code.

P001 – Authorization: In order to call up the protected commands, one must start authorization by using the P001 command.

Enter: P 001 H P P P P H or P 1 H P P P P H

The authorization code "0000" has been programmed for delivery. The phonograph is not protected and the operator can choose his own code by entering command P002. For security reasons the code number is not shown. In the display each number is shown as "P. When "PPPP" is shown, the secret code number is complete and after pressing "H" and leaving the programming mode, the machine is protected.

P002 – Changing of authorization code: During regular operation changing of the authorization code is only possible after previous authorization. Illegal misuse is thus prevented.

Enter: P 001 H P P P P H (for authorization)

Enter: P 002 H p p p p H (when entering new authorization code)

Caution: As described beforehand, the authorization code is NEVER shown! Therefore, it is important that the code is never lost since there is no opportunity to reprogram the phonograph.

2. Statistics P010 to P029

Within the command group statistics there is information regarding cash and number values as well as statements as to how often CDs are played (popularity, hit parade).

The single comamnds for cash value and counters are divided into two groups. The regular information is under code "0". Cumulated values are under code "1" which have been added up since the jukebox has been operating.

Individual commands:

Popularity: Relating to CD albums, the commands P010 and P011 exist in order to determine the popularity.

P010:
- 0: Display of number of least played CD
- 1: Display of number of the next higher CD (stepping through with "1")
- 2: Number of plays
- 3: Information to any CD (enter CD number)

After entering the proper code, the display shows the information such as the following:

Enter: P 010 H 0 1 *i.e. least played CD No. 45*

Enter: P 010 H 2 *i.e. 13269 plays*

Enter: P 010 H 3 53 H
i.e. CD No. 53 in 17th place

coinopmanuals.com

P011: 0: Display of number of most popular CD
1: Display of number of next higher CD (advance with "1"
2: Number of plays
3: Information regarding any CD (enter CD number). ---

After entering the proper code, the display shows the respective data.

Enter: P 011 H *0* *i.e. most popular CD No. 19*
1

Enter: P 011 H *2* *i.e. 731 plays*

Enter: P 011 H *3 24 H*
i.e. CD No. 24 in 2nd place

Hit Parade: One can also call up the top 30 titles.

P012: 0: Display of top title number, Hit No. 1
1: Display 2nd best title (advance with key "1")
2: Number of plays of the actual title

Enter: P 012 H *0*
1 *i.e. in 16th place: Title 3 of CD 1*

2 *i.e. this title was played 169 times until now:*

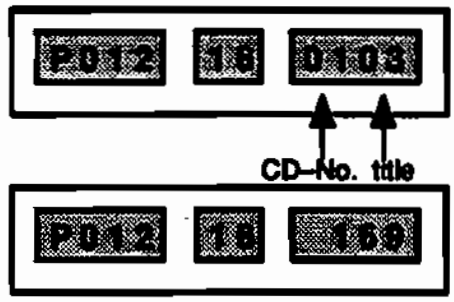

Values of several counters: The following commands display the actual cash contents as well as diverse counter readings since the last collection. One receives statistics concerning the entire time of operation by reading the cumulated counters.

Cashbox: The display of the cash amount is done by total numbers, read out in currency amounts. Contrary to the monetary value setting in command group P07x where the coin value multiplied by factor 100 is displayed, i.e. $1.— are entered in P07x as 0100, but are shown as 1 in P013.

Display of the cash contents is indicated by maximum 6 spaces (max. display: $ 99 9,999.–).

P013: 0: Display of cash contents since the last collection
1: cumulated cash contents

Enter: P 013 H *0*
1 *i.e. $34,829.–*

coinopmanuals.com

Coin counter/bill counter: Besides displaying the cash levels, the counters of the individual money chutes can be called up. This makes possible an additional control of the cash contents. The five integrated counters are distributed as follows:

Chutes 1 to 3: only coins (defined by monetary value setting P071 to P073)
Chute 4: coins as well as bills (can be selected with P074)
Chute 5: only bills (defined by P075)

The total of the individual counters corresponds to the total of the cashbox contents.

P014:
0: Number of coins through Chute 1 (enter P071)
1: Number of coins through Chute 2 (enter P072)
2: Number of coins through Chute 3 (enter P073)
3: Number of coins through Chute 4 and/or bills counted in Bill Validator 1 (enter P074)
4: Number of bills counted in Bill Validator 2 (enter P075)

5: Cumulated counter Chute 1 (enter P071)
6: Cumulated counter Chute 2 (enter P072)
7: Cumulated counter Chute 3 (enter P073)
8: Cumulated counter Chute 4 (enter P074)
9: Cumulated counter Chute 5 (enter P075)

Enter: P 014 H
0
1 *i.e. 12.543 coins through*
2 *channel 2:*
...
9

The respective cashbox total is derived by multiplying: number of coins x monetary value of coin.

Additional Counters: With commands P016 to P025 diverse counters can be called up which can be used as actual counters and as cumulative ones as the commands described previously. The statistical data contained therein can be used to settle accounts.

P016:
0: Number of **titles played**
1: Cumulated counter

P017:
0: Number of **titles chosen**
1: Cumulated counter

P018:
0: Number of **albums chosen**
1: Cumulated counter

P019:
0: Number of **overplay titles**
1: Cumulated counter

P020:
0: Number of **credits paid**
1: Cumulated counter

P021:
0: Number of **free credits**
1: Cumulated counter

P022:
0: Number of **background titles**
1: Cumulated counter

P023:
0: Number of **titles in auto play mode**
1: Cumulated counter

P024:
0: Number of **advertising titles**
1: Cumulated counter

P025:
0: Number of **Happy-Hour-credits**
1: Cumulated counter

>>

coinopmanuals.com

I.e.: calling up number of titles played; a total of 10273 titles were played on this jukebox.

Enter: P 016 H 1 *i.e. 10,273 titles played in total*

The counters P026 and P027 are not used.

Further interesting data are recorded in counters P028 and P029.

P028: Number of credits unused.
This shows the number of payed credits available for selections of titles or albums.

P029: Number of chosen unplayed titles.
This shows how many entries are remaining in the selection storage.

3. Data Transfer/Cancellation! P030 to P033

In this group of service program commands the stored data in the counters mentioned beforehand are prepared for output to a DATA PRINT or to evaluation devices which process the data. Prerequisite is, for instance, the DATA PRINT is already connected to the evaluation connector (ST2 on the control unit). After calling up the command and entering the respective code, data transfer follows.
There are two ways of Print–out possible:

P030 transfers all available data in text mode. The data are stored within the DATA PRINT. They can be printed out or edited on a PC i.e. with the software DATA CONTACT.
The counters of the phonograph are deleted after the print–out is done and the cabinet lid is closed.
P031 transfers all data in graphic mode. The data are printed–out directly after recieving.

See also the print–out examples in chapter 15.

If an error is determined, "E0" is shown in Display 3. In that case, please check the connection to DATA PRINT.

Display of the Jukebox if a transfer error occurs:

Remember to pull out the interface cord after the print–out is finished.

DATA PRINT Print–out in Text Mode

P030: 0: All data of the statistics counters are processed and sent to DATA PRINT. There they are stored and printed out depending on DATA PRINT setting.

The stored data can continue to be processed by a PC, i.e. by DATA CONTACT.

Enter: P 030 H 0

The counters of the phonograph are deleted after the print–out is done and the cabinet lid is closed.

coinopmanuals.com

DATA PRINT Print–out in Graphic Mode

Contrary to the output of P030, the entire statistics as well as individual statistical areas can be printed out by P031. But the data are not stored within the DATA PRINT.

P031:
0: Print all data
1: Cashbox amount
2: Counter with cashbox
3: General settings
4: Popularity of all CDs
5: Hit parade of the best 30 titles
6: The last 20 errors shown

Enter: P 031 H *0*
1
... *i.e. 4 print–out popularity:*
6

CANCELLATION

The P30 group contains not only the printing commands but also the cancellation commands of counters P010 to P024.Only the "regular" counters are cancelled. The cumulated counters are excluded from cancellation. The memories for credit and selection of titles as well as the error memory are cancelled.To avoid the cancellation of data by accident or by unauthorized persons, this function can be protected by an authorization code (enter P001).

P033: **!!CAUTION!!**
0+H: Cancellation of all memory contents
1+h: Cancels hit parade (P012)
2+H: Cancels popularity (P010)
3+H: Cancels counters and cashbox contents (P013–P024)
4+H: Cancels credit memory
5+H: Cancels selection memory
6+H: Cancels error memory

To additionally safeguard accidental cancellations, each input has to be confirmed by pressing "H".

Enter: P 033 H *0 H*
1 H
2 H *i.e. cancel popularity:*
...
6 H

coinopmanuals.com

4. General Settings P040 to P054

In order to adjust each phonograph individually to the location requirements, certain general settings can be individually changed. Basis are detailed values which have been set at the factory (Note: "default values").

P040: 0+H: programming of default values (P041 to P054, P077, P094)
cancellation of values (P091 to P144), set to inactive:

P041:	0	P050	2	P077	0
P042:	0024	P051	31	P094	0
P043	1105	P052	16		
P044	1000	P053	0505		
P045	0	P054	0808		
P046	0				
P047	0				
P048	0				
P049	2				

1+H: as above, additional programming of default values for:

	backgroundmusic		autoplaytitles	with defined acces to all CDs.
P104:	1	P114	15	
P107:	0	P117	1	

Enter: P 040 H *0 H*
1 H *i.e. set default values*

P041: **I.D. Number**; every phonograph can be programmed with its own I.D. number. Data print-outs can then be easily identified when several machines are evaluated. The I.D. number has at most 4 digits.

Enter: P 041 H *nnnn H*

P042: **Maximum number of selectable CDs and titles**; in partially equipped phonographs, unused magazine slots can be excluded. A maximum of 100 CDs (01–to 00) as well as a maximum of 99 titles can thus be selected. (Default value: 24).

Enter: P 042 H *0024 H*
i.e. release 100 CDs with
24 titles each to be selected

Please remember that with each change regarding the number of CDs, the new parameters will have to be reported to the juke box via program step P160 or P161. Otherwise, there will be problems when playing the CD.

coinopmanuals.com

P043: **Light in stand–by;** a light generator can be programmed, hich causes the phonograph to attract the patrons' attention as long as no music has been selected. OPTION!

Enter: P 043 H

Programming the running light is done by entering a 4 digit number according to the following scheme:

A: Switch over charakteristica	0= hardly 1= softly	
B: Speed	0= slowly 3= fast	
C+D: various running lights	01 to 15	

1105: Running light no.05, slowly with softly switching light.

P044: **Light during play;** another light generator can be programmed here to differentiate between the two. OPTION!

Enter: P 044 H

Programming the light show is done by entering a 4 digit number according to the following scheme:

A: Mode of operation	0= steady light 1= light organ	
B: Basic brightness/contrast	0= dark 3= bright	
C+D: Various light effects	00= lightorgan 01 to 15 s.o.	

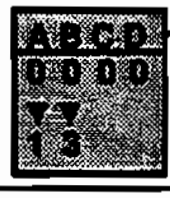

1000: light organ, relative dark

P045: **Limit play time of one track** in minutes; in order to suppress too long titles play time can be limited. The title just playing will slowly fade when the time (value "nn" in minutes) is up. When entering 0, there is no limit.

Enter: P 045 H *nn H*
3 H: titles will slowly fade after 3 min.

P046: **Sequence of plays at normal selection:** in order to alter the music menu, three variations can be chosen when playing different titles:
0 – play as selected (FIFO)
1 – play in numerically ascending numbers
2 – play randomly (RANDOM).

Enter: P 046 H *n H*
2 H i.e. play randomly

coinopmanuals.com

P047: **Maximum number of titles of one CD** (value "n" as number)in sequence; here it is determined how many titles of one CD are played in sequence. 0 means no limit.

Enter: P 047 H *n H*

0 H *i. e. no limit*

P048: **Automatic advancing of title display;** 0 = no automatic advancing. If minutes are entered here (value "nn"), the title display is changed accordingly in stand–by.

Enter: P 048 H *nn H*
10 H *i.e. advancing of title display every 10 min.*

P049: **Cancel credit** after X/10 hrs. (X x 6 min.) power off or stand–by.

P050: **Cancel selection memory** after X/10 hrs. (X x 6 min.) power off.

Value "X" can be between 0 and 240 with commands P049 and P050.
i.e. X = 1: waiting time = 6 min.
X = 10: waiting time = 1 hr.
X = 240: waiting time = 24 hrs.

"0" does not cancel.

Enter: P 049 H *2 H*
i.e. cancel credit after 12 min. power off/stand–by (2/10 hrs.):

Enter: P 050 H *4 H*
i.e. cancel selection memory after 24 min. power off:

Maximum Volume Levels

Maximum volume levels during play and background mode can be pre–set to a certain limit. The manually adjustable volume level of the phonograph cannot go beyond the set levels.

P051: **Maximum volume during play;** can be set between 0 (mute) and 31 (loud).

P052: **Maximum volume during background mode;** can be set between 0 (mute) and 31 (loud).

Enter: P 051 H *31 H*
i.e. maximum volume possible

coinopmanuals.com

Set volume for play mode

With command **P053** the volume of the phonograph is set. This function can be set in two ways:

In the program mode it can be set via the keypad of the phonograph or the remote control.
In regular play mode it can only occur via remote control.

In both cases one hears the volume changes immediately.

Key pad layout for volume setting:

1 left channel louder	2 both channels louder	3 right channel louder
4	5	6
7 left channel quieter	8 both channels quieter	9 right channel quieter
C Cancel	0	H Step to the next command.

Enter: P 053 H

Change per pressing keys
i.e. Key "2" = louder

channel value: left, right

Sound setting

With command **P054** the sound setting is performed in a range from 1 to 10. Here treble and bass volume are set for both channels at the same time. The changed setting can also be immediately heard.

Key pad layout for sound setting:

1 more bass	2 more bass + treble	3 more treble
4 mean value	5 mean values	6 mean value
7 less bass	8 less bass + treble	9 less treble
C Cancel	0	H Step to the next command.

Enter: P 054 H

Change per pressing keys
i.e. Key "8" = less bass and treble

value of bass, treble

coinopmanuals.com

5. Price Settings P060 to P066

To make programming of credit values easier and faster, a table for price settings, standard value via code number, has been programmed for command **P060** in which actual price values have been entered. The programming of the five possible price levels can be automized with the table.
Another possibility is the individual programming of the individual price scales with commands **P061** to **P065**. Entry as per form plays/monetary value: nn xxxx (nn = two-digit number of plays, xxxx = 4-digit monetary value).

Table 2:"Price Settings"

Code No.	COUNTRY	P061	P062	P063	P064	P065	Remarks
0	————	00 0000	00 0000	00 0000	00 0000	00 0000	no coin conversion in this setting
1	Germany	01 0100	01 0100	03 0200	03 0200	03 0200	1 play = 1,–DM
2	Belgium	02 2000	02 2000	02 2000	06 5000	06 5000	
3	Netherland	02 0100	02 0100	02 0100	06 0250	06 0250	2 different settings
4	France	02 0500	02 0500	10 1000	10 1000	10 1000	
5	Switzerland	02 0100	02 0100	05 0200	05 0200	14 0500	
6	Austria	01 0500	01 0500	03 1000	03 1000	07 2000	
7	Italy	01 0400	01 0400	01 0400	03 1000	03 1000	
8	Spain	01 0050	01 0050	02 0100	02 0100	05 0200	
9	Greece	01 2000	01 2000	01 2000	02 5000	02 5000	
10	Jugoslavia	01 0200	01 0200	01 0200	03 0500	03 0500	
11	Denmark	01 0300	01 0300	02 0500	05 1000	12 2000	4 different settings
12	Norway	01 0300	01 0300	02 0500	02 0500	04 1000	
13	Finland/Sweden	01 0300	01 0300	01 0300	02 0500	02 0500	
14	Hungary	01 2000	01 2000	01 2000	01 2000	01 2000	
15	Ireland	01 0010	01 0010	03 0020	03 0020	10 0050	
16	Great Britain	01 0030	01 0030	02 0050	02 0050	05 0100	
17	USA (1) / Canada	01 0050	01 0050	01 0050	03 0100	03 0100	Dollarbill on chan.5 (P065)
18	USA (2)	01 0050	01 0050	03 0100	03 0100	18 0500	
19	Africa	01 0020	01 0020	03 0050	03 0050	07 0100	
20	Australia	01 0100	01 0100	01 0100	03 0200	03 0200	
21	Netherl. Antillen	01 0400	01 0400	01 0400	01 0400	01 0400	
22	New Zealand	01 0050	01 0050	01 0050	01 0050	01 0050	

Programming the price settings by default values

P060: In order to program the phonograph with the default values of the table, the respective code number is entered after command P060 and confirmed with "H". The setting selected (n = code no. of the table) is automatically conferred to the respective price scales.

Enter: P 060 H n H
18 H i e. price setting: USA

coinopmanuals.com

Programming the price settings with individual (personnel) values

P061 to P065: The stakes for the individual price scales can also be separately defined. With commands P061 to P065 the respective stake can be programmed.
You just have to observe the order of entering the values: P061 is programmed with the lowest and P065 is programmed with the highest Price setting.
Unused Steps may be programmed with zero or with the preceeding value (examples see table)

Example of individual price setting: 12 titles for $ 5,– (price scale 3).

Enter: P 065 H 120500 H

Programming an album bonus

The setting of bonus credits for album selection is done with command P066 in the service program. The following settings are permitted:

P066:
0: no album selection possible
1: no bonus (default setting),
2: 1 bonus for every 5th track,
3: 1 bonus for every 4th track,
4: 1 bonus for every 3rd track.

Setting is confirmed by pressing "H".

Enter: P 066 H *0 H*
1 *i.e. no bonus*
...
4

coinopmanuals.com

6. Monetary Value Setting P070 to P077

As with the price setting, the identification of the different coins as related to the monetary values processed by the phonograph, can be done automatically when the pre-defined basic values are sufficient.
Table 3 "Monetary Value Setting" shows which setting can be programmed as basic value (see next page).

P070: The standard values of the table are selected with command P070 "n" + "H" (n = code no. from table).

Enter: P 070 H *n H*
10 H i.e. USA

"n" is the code number for the respective setting. To avoid erroneous entries, each entry has to be confirmed by "H". This is very important since entry of Code Number 0 cancels the current monetary value setting and no currency acceptance is possible.

P071 to P075: Individual monetary values: as with the price setting, with the monetary value setting the coin value of each chute can be individually identified.
This is easily done by inserting one or more coins after command P070 has been called up. According to coin value the program changes to the proper chute command P071 to P075. On display 1 the monetary value of each coin is displayed. This can be changed as needed. Unused chutes have to be programmed with monetary value 0.

Entries occur in the smallest counting unit of each currency that makes sense, i.e.

USA with $1,– => 0100,
GERMANY with DM 5,– => 0500 or
AUSTRIA with öS 20,– => 2000.

Normally the standard setting is sufficient.

BONUS CREDITS

With command **P076** another bonus (value n = 0 to 4) is defined. The bonus for paying with bills.

Enter: P 076 H *nn H*
3 H i.e. 3 bonus credits

When accepting a bill in Chute 5, this bonus is added to the regular credits.

INDIRECT / DIRECT MONEY TO CREDIT REVALUATION

With this command it is possible to differ between the how and when of the revaluation of inserted coins.

P077:
"0" + "H" Indirect revaluation: inserted coins are stored. At an appointed coins value the credit is defined from the highest possible price setting, including a possible bonus.
"1" + "H" Direct revaluation: inserted coins are revaluated directly after insertion. Then no bonus is possible with multiple insertion of coins.

Enter: P 077 H *n H*
0 H i.e. indirect revaluation

coinopmanuals.com

Table 3:"Monetary Settings"

Table No.	COUNTRY	channel 1(P071)	channel 2(P072)	channel 3(P073)	channel 4(P074)	channel 5(P075)	Remarks, example for 1 chan.
0	————	0	0	0	0	0	no coin conversion
	mechanical coin acceptor						
1	Germany, Schwitzerland, Venezuela	100	500	200	0	0	100 = 1,–DM 100 = 1 sfr 100 = 1,–Bol
2	Belgium	0	2000	500	0	0	2000 = 20 Bfr
3	Netherlands	25	250	100	0	0	250 = 2,5 hfl
4	Denmark, France	100	500	1000	0	0	100 = 1 dkr
5	Austria	500	2000	1000	0	0	500 = 5 ÖS
6	Italy	200	100	500	0	0	200 = 200 L
7	Spain	0	25	100	0	0	25 = 25 Pst
8	Finland, Norway, Jugoslavia	0	500	100	0	0	500 = 5 mK 500 = 5 Kr 500 = 5 Din
9	Great Britain, Ireland	20	50	10	0	0	20 = 20 p
10	USA	10	50	25	0	100	10 = 10 c, 100 = 1 $
11	Canada	0	25	0	0	100	25 = 25 c, 100 = 1 $
12	Union of South–Africa	20	100	50	0	0	20 = 20 c, 100 = 1 R
13	Australia	100	50	20	0	0	100 = 1 $
14	Netherl. Antillen	0	100	25	0	0	100 = 1 NAF
	elektronic coin acceptor						
15	Germany, Schwitzerland, Italy	500	100	0	200	0	500 = 5,–DM 500 = 5sfr 500 = 500 L
16	Belgium	5000	500	0	2000	0	100 = 1 Bfr
17	Netherlands	25	250	500	100	0	25 = 25 c, 500 = 5 hfl
18	France	1000	200	100	500	0	1000 = 10 F
19	Denmark, Austria	2000	500	100	1000	0	2000 = 20 dkr 2000 = 20 ÖS
20	Spain	200	50	25	100	0	200 = 200 Pst
21	Greece	0	50	20	0	0	50 = 0,5 Dr
22	Norway	1000	100	0	500	0	1000 = 10 Kr
23	Finland	0	500	100	0	0	200 = 200 L
24	Sweden	500	100	0	100	0	500 = 5 Kr
25	Great Britain	100	20	10	50	0	100 = 1£, 20 = 20 p
26	USA	100	25	0	50	0	100 = 1$
27	Canada	10	100	25	0	0	10 = 10 c, 100 = 1 $
28	Australia	0	100	20	200	0	200 = 2 $
29	Netherl. Antillen	0	0	100	0	0	100 = 1 NAF
30	Neu Zealand	50	10	5	20	0	50 = 50 c

Chutes entered with 0 on this table are blocked. One must be careful to block also the coin pathways so these coins will not be accepted and are rather expelled through the coin return.

coinopmanuals.com

7. Programming Real Time Clock P080 to P082

The most important modification of the ES–V technology is the implementation of a real time clock. Referring to the data supplied by the clock, a number of functions have been developed that are dependent on chronological data for start and stop times. Together with the weekday programming which continues to be available, an "automatic programm" for a whole week can be developed during which all functions operate automatically.
The real time clock runs quartz–precise with a battery backed–up power supply if the phonograph is turned off.

Set time: With command **P080** the time can be set. The newly set minute information starts the counter for seconds automatically at zero.

Keypad layout for command "set time":

1 ▲ hour +1	2	3 ▲ minute +1
4 12:00	5 00:00	6 30 minutes
7 ▼ hour –1	8	9 ▼ minute –1
C Cancel	0	H Step to the next command

Enter: P 080 H

change per pressing keys
i.e. 10.45 h

Set date: With command **P081** the date is set. The date is shown on displays 2 and 3.

Keypad layout for command "set date":

1 ▲ day +1	2 ▲ month +1	3 ▲ year +1
4	5	6
7 ▼ day –1	8 ▼ month –1	9 ▼ year –1
C Cancel	0	H Step to the next command

Enter: P 081 H

change per pressing keys
i. e. May 21, 1992:

coinopmanuals.com

Set day code: With command **P082** the day code is set for the week–day of the previous set date.

Key pad layout for command "set day code":

1 = Monday
2 = Tuesday
3 = Wednesday
4 = Thursday
5 = Friday
6 = Saturday
7 = Sunday

1	2	3 ▲ day code +1
4	5	6
7	8	9 day code –1 ▼
C Cancel	0	H Step to the next command

Enter: P 082 H

change per pressing keys i.e Thursday is 4:

After confirming one week–day entry the jukebox switches to the next week–day.

The data supplied by the real time clock are processed by commands P090 to P135 (described as follows) for the so–called time windows. Here the entry of the time window values also occurs via the illustrated key-pad layout.

Furthermore the informations of time and date are used for the print–out of statistical data to the DATA PRINT (P030 and P031).

coinopmanuals.com

8. Programming Free Credits P090 to P094

The group of 90th commands allows the operator to give free credits (music selection without coin insert) at certain times of the week.
Amount and type of free credits are set in the program as well as the time periods.

P090: In P090 a standard setting cancels automatically the previous setting.
The time factor is set to zero, so there are no automatic time periods for free credits.

Enter: P 090 H 0 H

P091: To set the starting time for the time window "free credit," the keypad is used (see P080).

Enter: P 091 H
Set per pressing keys
i.e. starting time 12:34
confirm setting with key "H".

P092: Here the stop time of the a.m. time window is set (see P080).

Enter: P 092 H
Set per pressing keys
i.e. stopping time 13:45
confirm setting with key "H".

P093: Here the weekday is chosen on which the previously determined time window is to become active.

On the middle display the weekdays (according to the illustration of P082) are shown through Numbers 1 to 7. Each weekday can be activated individually. "1" means active on that day. "0" means non–active. The inputs must be confirmed by pressing "H".
To simplify the entries it is defined that the whole week is active with "0" or "1" (for all days).

Enter: P 093 H 0 or 1 H
Set per pressing keys
i.e. monday is inactive
confirm setting with key "H".

With confirming one week–day entry the software steps to the following week–day.

P094: Entering the number of free credits.

Different program types are possible:

0: No free credits possible (default setting).
<200: Limited free credit. Amount corresponds to input number. Free credits can be used individually. In the display the remaining credits are shown.
=200: Unlimited free credit while time window is active.
=201: Switching between no free credits and unlimited free credits while time window is active. Switching via remote control.
=202: Unlimited free credit automatically while time window is active. If non–active switching is done via remote control.

Enter: P 094 H 200 H
i.e. no free credit:

coinopmanuals.com

9. Programming Background Music P100 to P107

During those times when few people are present or for social festivities, the phonograph operator can call up the background mode. The played music is heard quietly in the background. This operational mode remains even after a power failure.If money is inserted into the machine and a title selected, the background music is interrupted for the duration of play. The factory setting (P040=1) defines that the background mode can be started and stopped by pressing the key "BACKGROUND" (P104=1, P107=0).

P100: If the command P100 is called up and "0" is entered and confirmed with "H", the default setting is activated because all settings of Group P10x will be set to 0.

Enter: P 100 H 0 H

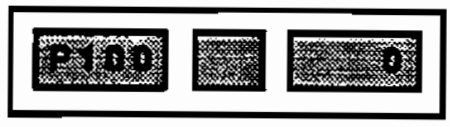

With command **P101** the starting time and with command **P102** the stopping time is set for the time window of background music. Key pad layout see P080. With command **P103** the week–days are set when background music should be played. Key pad layout see P082. With confirming one week–day entry the software steps to the following week–day.

P104: With command P104 the mode of operation is set. Three types are possible.

P104 "0" no background music.
P104 "1" allows starting and stopping background music by pressing background key on machine or on remote control.
P104 "2" automatically plays background music at defined times of the time window.

Enter: P 104 H n H
2 H i.e. automatically within the time window

P105: What is played as background music, is also determined by the operator. With command P105, followed by 20 four–digit entries, 20 titles or albums can be determined. Without entry in P105 all CDs (defined by P042 to be selectable) are played.

Enter: P 105 H nnnn H
i.e. 1. entry: CD #17 title 3 and so on:

P106: Another new function is the "Patron Selection". With command P106 the operator determines whether the selected titles for background music can also be chosen by other customers.

P106 "0" titles and albums free for selection.
P106 "1" titles or albums are locked.

Enter: P 106 H n H
0 H i.e. titles are not locked:

P107: The titles selected in P105 are played in the sequence selected in P107.

P107 "0" sequence of play in order of entry (FIFO), factory setting
P107 "1" random play (RANDOM).

P108: With this step Background music can be set up in such a way that it has to be paid for. In this case, every time BGM is turned on "n" credits are subtracted, independent of the number of titles to be played. When n=0 no credits are subtracted.

P108 "0" Background music as in the past, without credit.
P108 "n" Background music deducts "n" credits (n=1 to 99)

Enter: P 108 H n H
2 H i.e. two credits are deducted:

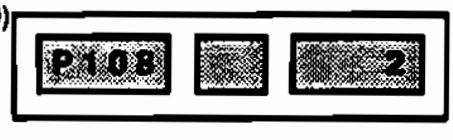

coinopmanuals.com

10. Programming Auto Play P110 to P117

The phonograph can be programmed to automatically play a title once in a while to animate the audience during stand–by, the time period when no selections are being made. The factory setting (P040=1) makes it possible that any title is played every 15 minutes (P114=15, P117=1).

P110: The standard setting is "no auto play" since with command P110 "0" + "H" all entries in group P11x are set to zero.

Enter: P 110H *0 H*
i.e. set default values:

With command **P111** the starting time and with command **P112** the stopping time is set for the time window of auto play. Key pad layout see P080.

P113: With command P113 the week–days are set at which auto play should be active. Key pad layout see P082

Enter: P 113 H *0 or 1 H*
Set per pressing keys
i.e. Wednesday inactiv:
confirm settings with key "H"

With confirming one week–day entry the software steps to the following week–day.

P114: With command P114 the mode of operation is set. Three types are possible.

P114 "0" + "H" no auto play
P114 "nn" + "H" time between two titles (nn = max. 99 minutes)

Enter: P 114 H *nn H*
30 H *i.e. all 30 minutes play an animation title*

P115: With command P115 followed by 20 four–digit entries (value nnnn), 20 titles or albums can be defined. Without entry in P105 all CDs (defined by P042 to be selectable) are played.

Enter: P 115 H *nnnn H*
i.e. 1. entry: CD # 97 all titles
and so on:

P116: also defines a "Patron Selection" (see P106) which defines if a title is locked or not

P116 "0" titles and albums are free for selection
P116 "1" titles and albums are locked.

Enter: P 116 H *n H*
0 H *i.e. titles are not locked:*

P117: defines the sequence of play for the titles or albums chosen under P115.

P117 "0" Play in sequence of entry (FIFO)
P117 "1" Play randomly (RANDOM)

Enter: P 117 H *n H*
1 H *i.e. play randomly:*

coinopmanuals.com

11. Programming Advertisements P120 to P127

The broad distribution of CDs has led to advertising for various areas being recorded on CDs. Thus, you have another source of income with phonographs with ES–V technology.
Standard value is again **"no advertising"**.

P120: With the command P120 "0" +"H" all entries of group P12x are cancelled (set to zero) and no advertising is played.

Enter: P 120 H 0 H
i.e. set default values:

With command **P121** the starting time and with **P122** the stopping time is set for the time window of advertisement play. Key pad layout see P080.

P123: With P123 the week–day is set for advertisement play. See P082 for key pad layout.

Enter: P 123 H 0 or 1 H
Set per pressing keys
i.e. sunday inactiv:
confirm settings with key "H"

With confirming one week–day entry the software steps to the following week–day.

P124: With P124 it is set if or if not and which time between advertising spots should be waited .

P124 "0" + "H" no advertisement play
P124 "nn" + "H" time between titles (nn = max. 99 minutes).

Enter: P 124 H nn H
30 H i.e. play a title every 30 minutes:

P125: With command P125 followed by 20 four–digit entries (value nnnn), 20 titles or albums can be defined.

Enter: P 125 H nnnn H
i.e. 1.entry: CD # 90 3.title
and so on:

P126: defines "patron selection" again. See P106.

P126 "0" titles and albums are free for selection
P126 "1" titles and albums are locked.

P127: defines the playing sequence for advertising spots selected with P125.

P127 "0" Play in sequence of entry (FIFO)
P127 "1" Play randomly (RANDOM)

coinopmanuals.com

12. Blocking Certain Titles P130 to P135 (lock–out titles)

At certain times it may be necessary to lock–out one or more titles from being played. Perhaps these titles should not be played by minors or are simply damaged (bad playing quality). Standard is that all titles can be played.

P130: With the command P130 "0" + "H" all entries of group P13x are set to zero and no CDs or titles are locked–out.

Enter: P 130 H 0 H
i.e. set default values

With command **P131** the starting time and with **P132** the stopping time is set for the time window for lock–out. Key pad layout see P080.

P133: With P133 the week–day is set. See P082 for key pad layout.

Enter: P 133 H 0 or 1 H
Set per pressing keys
i.e. saturday activ:
confirm settings with key "H"

With confirming one week–day entry the software steps to the following week–day.

P134: With P134 "0"+"H" the titles can be selected in the time window; with "1" they are locked–out.

Enter: P 134 H 1 H
0 H i.e. all titles are selectable within the time window:

P135 defines a maximum of 20 titles or albums which are supposed to be locked–out. Input occurs with 4 digits for the CD number (nn__) and the title (__nn).

Enter: P 135 H nnnn H
i.e. 1.entry: CD #85 all titles and so on.

NOTE: Take care to change entries in P135 (if necessary delete entry) to a certain CD number if you change this CD. To delete an entry you step through the list of P135 by pressing key "H" as long as you reach the right entry. Now enter "0" and confirm with "H".
Or you delete all entries by setting default values with command P130 and "0" + "H".

coinopmanuals.com

13. Happy–Hour–Credits P140 to P144

For additional animation of the audiance this function is implemented.
At defined times of the week additional free credits (Happy–Hour–credits) are given, depending on the number of bought credits.
Standard setting is that no Happy–Hour–credits are given.

P140: With the command P140 "0" + "H" all entries of group P14x are set to zero so that there is no happy–hour.

Enter: P 140 H 0 H

i.e. set default values
No Happy–Hour:

With command **P141** the starting time and with **P142** the stopping time is set for the time window for Happy–Hour–credits. Key pad layout see P080.

P143: With P143 the week–day is set. See P082 for key pad layout.

Enter: P 143 H 0 or 1 H

Set per pressing keys
i.e. saturday activ:
confirm settings with key "H"

With confirming one week–day entry the software steps to the following week–day.

P144: Here a calculation number may be programmed. This number defines how many credits one must have bought to get an additional Happy–Hour–credit.
P144 "0"+"H" **no** Happy–Hour
P144 "n"+"H" after "n" bought credits (n=1 to 5) 1 additional Happy–Hour–credit is given.

Enter: P 144 H n H
3 H i.e. after 3 bought credits
1 additional Happy–Hour–credit is given

coinopmanuals.com

14. Calling up Test Programs P150 to P164

To support the operator when equipping the CD changer with new CDs, trouble–shooting or servicing, several aid functions have been incorporated as known from earlier phonographs. Group 15x of the test programs includes functions such as read–out of error memory, various continuous run tests as well as input and display tests. For these purposes, the respective group code (Fx) is shown in the middle display. Group 16x serves to integrate the CDs and their number of titles in the juke box memory.

14.1 Test Programs for Service Operation P150 to P157

P150: Read–out of Error Memory:

0: last registered error; see Table 4 for "Error Codes" on the next page.
1: previous error; the phonograph records the last 20 error reports.
2: CD number during which the error occurred.
3: Time of error and
4: Date of occurrence

Display:

Continous run tests

With commands P151 to P153 various tests in continuous run mode are executed. A continuous run can only be stopped by pressing the cabinet switch.

P151: Plays all CDs for 16 sec. (F1):

Enter: P 151 H 0

Start continuous run 1:

CD / Titel Anzahl der Fehler

P152: Plays selected CDs for 16 sec. (F2):

During CD play another number "nnnn" can be entered (continuous run 2). With each entry "Your Selection" will light up on the display panel.

Enter: P 152 H n n n n H
(enter a CD–number)

P153: Other Continuous Play Tests (F3 to F5):

Enter: P n

0: All CDs are placed on player, but are not played (continuous run 3, F3).
1: 6 certain CDs (CD No. 1, 25, 50, 51, 75, 00) are placed and played 16 sec. each continually (continuous run 4, F4)
2: Combination of twice continuous run 3 followed by 4 until cabinet switch is turned off (continuous run 5, F5).

P155: Display Test (F6):

During the display test all digits of 7–segment–displays and all control lamps are successively turned on and off. Pressing "H" will stop the test and continue it after pressing "H" again. The display test does not check the lamps of a light organ that might be connected.
Pressing "C" stops the test.

Enter: P 155 H
0: Start lamp test
(Display 2 shows briefly F6)

coinopmanuals.com

Table 4: "Error Displays"

Displays 1	2	3	Possible Causes	Corrections
	Er	01	EPROM contents (CONTROL–UNIT) disturbed.	Change EPROM (IC2) .
	Er	10	RAM (CONTROL–UNIT) defective.	Change RAM (IC 3). After that reprogram all program steps.
	Er	11	RAM contents (CONTROL–UNIT) short–term disturbance.	No correction necessary; program is reinitialized. Change RAM IC 3 if frequently occurring.
	Er	12	RAM battery is empty.	Change RAM (IC 3). After that reprogram all program steps.
	Er	20	Verification errors in program (CONTROL UNIT).	No correction necessary; program is reinitialized. Change CPU IC 1 if frequently occurring.
Pxxx	Er	30	Memory contents (CONTROL UNIT) invalid.	No correction necessary; program step Pxxx (in Display 1) is automatically reprogrammed.
Pxxx	Er	31	Memory contents (CONTROL UNIT) invalid or not programmed.	Program step Pxxx shown in Display 1 must be reprogrammed.
Pxxx	Er	40	Wrong price setting.	Check price setting and reprogram if necessary.
	Er	50	Coin mechanism defective. Too much credit.	Check coin mechanism.
	Er	6x	Error at CD player.	See Er 60 – Er 63.
	Er	60	Connection to the CD–player interrupted. No supply voltage present for decoder board or CD player.	Check connection cables to the decoder board, check fuses.
	Er	61	No CD recognized by CD player. No CD in CD tray, CD defective. Player defective.	Check CD and exchange if needed. Exchange CD player. Exchange decoder board.
	Er	62	Specified track on the CD not found.	Check the CD.
	Er	63	Malfunction while playing a CD.	Check the CD player with equipped CD for easy running.
	Er	7x	Malfunction on CD changer.	If error display does not disappear after 2 sec., error cannot be automatically corrected. No CD will be played until cabinet switch or "power on" is activated.
	Er	70	Malfunction of operating control.	No correction necessary.
	Er	71	Error during grip from magazine.	Equip CD–tray to magazine. Check alignment from magazine to pickup assy and adjust if necessary. Check function of light barrier OPPUM.
	Er	72	Error during replacing CD in magazine. Malfunction of grip lever.	Check alignment of magazine to pickup assy and adjust if needed. Check function of grip. Check function of light barriers OPGRL and OPGRR.
	Er	73	Malfunction during lift drive. Playing of CD not possible.	Check lift for jamming. Check function and correct adjustment of light barrier OPSTP (drive wheel).
	Er	74	End position of lift not o.k.. Playing of CD not possible.	Check function and adjustment of light barrier OPEND.
	Er	80	Short circuit on wallbox signal wire.	Check wallbox connection.
	Er	81	Malfunction of the audio processor (CB CENTRALE).	Change IC 1 = TDA 4390 if frequently occurring.
	Er	90	Title display, three blocking in sequence, not functional anymore.	Blocking remedy
	Er	91	Blocking title display while left movement.	
	Er	92	Blocking title display while right movement.	
	Er	93	Blocking title display, stack left.	see also chapter 9 "Title display" the paragraph 1.4
	Er	94	Blocking title display, stack right.	Jammed or dislocated title holders.

coinopmanuals.com

P156: Input Test (F7):
The input test checks all input ports and shows the results in a matrix on Display 3. The test can be stopped by pressing "C".

0: Start input test (Display 2 shows briefly F7)

Enter: P 156 H 0

i.e. Key switch operated:

The 4 digits of displays are used as follows:

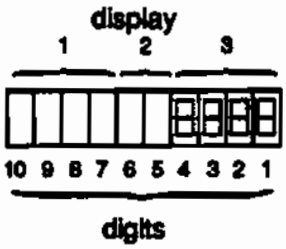

digit 1: state of operation i.e. key switch:

— 0 = locked not able to call background musik
1 = free

digit 2: bit number of input port (see table 5 "Attaching...", s. a. wiring diagram "Control Unit")

digit 3: port number from which input occurs (s.a. table 6:"Port–numbers of input ports").

digit 4: Is not used.

Table 5: "Attaching of bit numbers to input ports"

Bit number	corresponds to wiring diagram "Control Unit"	
0	signal line	A
1		B
2		C
3		D
4		E
5		F
6		G
7		H

Table 6: "Port–numbers of input ports"

Port number	name of input port
0	Control Unit (IC15)
1	Control Unit (IC16)
2	Control Unit (IC17)
3	Kea pad
4	Title display (IC1)
5	Is not used
6	Pickup driver (IC3)

coinopmanuals.com

Testing the CD changer

P157: Manual control of CD changer via keypad (F8):

In this test program the CD changer is controlled manually via the keyboard (Keys 1 to 0). The illustrated functions are executed by pressing the corresponding key depending on whether a CD is in the pick-up or not.

Lift not set down:

1	2 Lift up	3 Lift up stepwise
4 Get CD from left	5 Replace CD	6 Get CD from right
7	8 Lift down	9 Lift down stepwise
C Cancel	0 Replace CD set lift down	H

Lift is set down or CD is on player:

1 1.Play CD 2.CD in pause	2 >FF< afterwards 2x key "1" fast forward	3 Play next track
4 Replace CD get last one	5 1.Play C, 2.CD in pause	6 Replace CD get next one
7	8 >FR< afterwards 2x key "1" fast reverse	9 Play last track
C Cancel	0 Stop CD replace CD	H

This test serves also to check the opto couplers in the various end positions. The status of each opto coupler is displayed. If "1" is displayed, then the opto coupler is disrupted. A "0" means the opto coupler is not disrupted. The following table shows the different combinations. The digits 1, 2, 8, 9 and 10 are employed for this purpose.

Enter: P 157 H 0

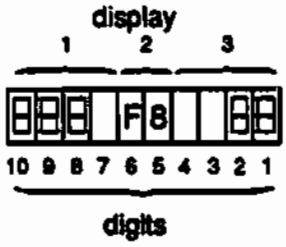

Digit 1:	Counter Wheel (OPSTP)
Digit 2:	Final Position (OPEND)
Digit 8:	Grip right (OPGRR))
Digit 9:	Middle Opto (OPPUM)
Digit 10:	Grip left (OPGRL)

On Diplay 2 (Digit 5+6) code F8 will be displayed during the test.
The test is stopped by pressing "C."

coinopmanuals.com

14.2 Recording title quantities in title memory

P160: Recording title quantities of all CDs

After calling up this command, the phonograph searches through all CD slots for the number of CDs defined in P042. During the search it reads the number of titles recorded on each CD into the title memory. This command is used by initial equipping, for example, or if several CDs are exchanged.
The number of titles on each CD is registered in the title memory. Simultaneously, the established values are displayed. The number of titles is also read with each playing a CD

Enter: P 160 H 0
i.e. result: CD 01 has 24 titles

P161: Recording title quantities of one CD

After calling up this command and entering the number of the newly installed CD, its number of titles is registered in the title memory (nn = 01 to number of P042). The number of titles from one CD is also read with every normal play of it. This function serves as single entry cancellation, if a not equipped CD is selected.

Enter: P 161 H nn H
67 H i.e. = CD #67;

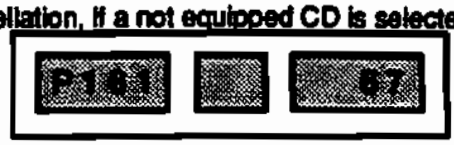

P162: Displaying all title memories

After calling up this command and entering the respective code number, the corresponding title data will be displayed.

0: Number of titles from CD #01
1: Switch to the next CD #
2: Return to the previous CD #
3: Title number of any CD

With P162,3 the two-digit CD number must be entered and confirmed with "H".

P163: Erasing entry in title memory

All entries in the title memory are set to 1. So all CD titles are cleared, but the phonograph furthermore may acces any CD tray. The basic function of the phonograph is kept. If new CDs are equipped and the command P160 is confirmed you may be sure that all new titles are stored in the title memory. P163 is to confirm by pressing "H".

Enter: P 163 H 0 H

After removing a CD you also have to remove the corresponding CD cover of the display unit.

P164: Switching between signal sources

For test purposes different signal input ports for the 3 intended signal sources can be switched individually. This is done with command P164 by entering different code numbers (value "n" of command):

0: No signal source active, mute (amplifier turned off)
1: CD changer is signal source
2: A cassette player is signal source.
3: A microphone is signal source.

This "manual" switching occurs automatically in normal play according to the signal source that is turned on.

Enter: P 164 H n H
2 H *i.e. for cassette player:*

coinopmanuals.com

UNIT DESCRIPTION

CONTROL UNIT

FOR NSM–PHONOGRAPHS

ES V–CD TECHNOLOGY

to
Technical Information, ASSY

176 393	THE PERFORMER GRAND II
176 352	THE WIZARD/ OLD FASHION WIZARD
176 514	THE PERFORMER CLASSIC
176 610	CD HIDE–AWAY II
176 598	FIREBIRD II
176 705	THE PERFORMER WALL

N S M
Aktiengesellschaft
Saarlandstraße 240
55411 Bingen am Rhein

4

coinopmanuals.com

INDEX

1 FUNCTIONAL DESCRIPTION OF THE CONTROL UNIT ES V

Spare parts list

Schematics CONTROL UNIT CD

coinopmanuals.com

1 FUNCTIONAL DESCRIPTION OF THE CONTROL UNIT ES V

The microprocessor (IC 1) on the CONTROL UNIT is the central control chip of the phonograph. It drives, controls and monitors all of the functions of the appliance, e.g. display, keypad, remote control, light organ, coin mechanism, title display, sound and volume and the drive of the CD changer.

The control unit is equipped with a battery buffered RAM (IC 5) including a real time clock. The values of selected titles, credits and actual adjustments of sound and volume are stored in this RAM.

With the service programs several adjustments can be programmed and stored. E.g. general settings, price and monetary settings, free credits, backgroundmusic, autoplay and lock–out titles and so on.
The integrated real time clock allows to activate several functions automatically depending on the actual date and time.

Within the RAM of the control unit voluminous statistic counters are stored. They can be evaluated with help of the service programs. They also can be printed out on the DATA PRINT. E.g. popularity of the CDs, top 30 hits, cash box, counters of coin mechanism, selected or played titles, overplays, free credits, background titles, autoplay titles, and so on.

Additional the least 20 error reports are stored in a error stack with date and time of occurence. This stack can be evaluated and printed out for diagnostics.

Note: The case number of each CD which is placed on the player is stored in the battery buffered RAM. So in case of exchanging either the RAM or the hole CD changer it is to take care that there is no CD on the player. If needed replace the CD with help of the service programs (see chap. 3, "P157").

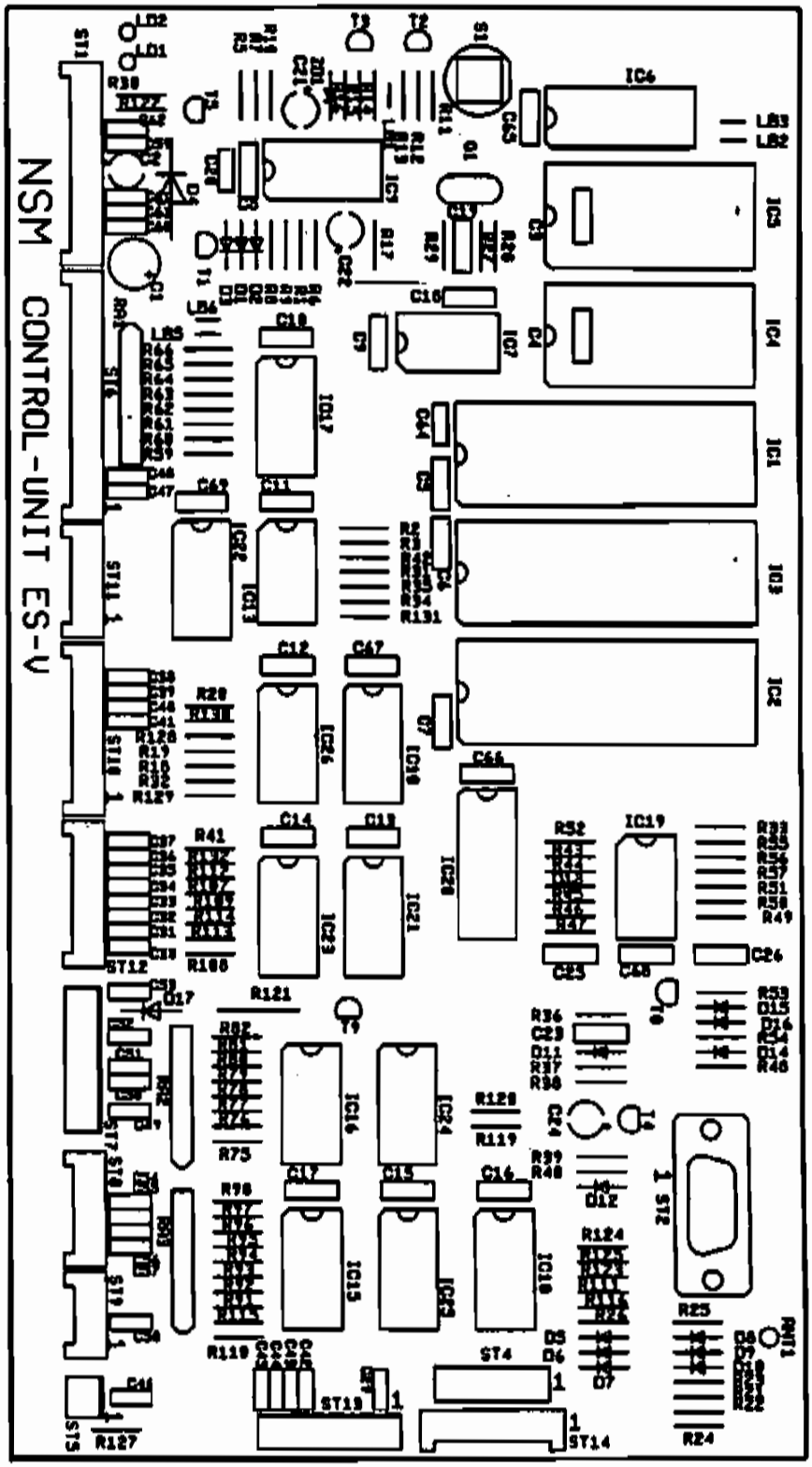

coinopmanuals.com

coinopmanuals.com

SPARE PARTS LIST

POS.	PART-No.	DESCRIPTION	DATA		QTY
	176 328	CB-CONTROL UNIT ES V. ASSY			1
	173 698	PROFILE, ASSY			1
	171 629	HOLDER			2
ST 9	225 651	PIN PANEL	4 prongs		1
ST 8	225 652	PIN PANEL	6 prongs		1
ST 11	225 992	PIN PANEL	6 prongs	red	1
ST 12	225 653	PIN PANEL	8 prongs		1
ST 10	225 654	PIN PANEL	10 prongs		1
ST 1	225 655	PIN PANEL	12 prongs		1
ST 6	225 656	PIN PANEL	15 prongs		1
ST 5	225 439	PIN PLUG	3 prongs		1
ST 7, 13	225 440	PIN PLUG	10 prongs		2
ST 2	225 828	D-SUB-CONNECTOR	SOCKET 9 prongs		1
Q 1	231 621	OSCILLATOR QUARTZ	3,6864 MHz HC 49		1
	222 473	IC-SOCKET	20 prongs		2
IC 6	176 397	IC-PAL, programmed	DECO 1.0		1
IC 20	176 561	IC-PAL, programmed	MUX 1.0		1
	222 447	IC-SOCKET	28 prongs		2
* IC 4	176 396	IC-MEMORY, programmed	64 K x 8		1
IC 5	231 497	IC-MEMORY, programmed	MK 48 T 18 B-20		1
	222 448	IC-SOCKET	40 prongs		3
IC 1	231 412	IC-MICROCOMPUTER	R 65 C02 – P2		1
IC 2	231 414	IC-MICROCOMPUTER	R 65 C22 – P2		1
IC 3	231 462	IC-MICROCOMPUTER	R 65 C52 – P3		1
IC 13	221 525	IC-TTL	SN 74 LS 03		1
IC 7	221 652	IC-TTL	SN 74 LS 04		1
IC 9	221 792	IC-TTL	SN 74 LS 123		1
IC 10	231 339	IC-CMOS	74 HCT 4053		1
IC 15-17	221 763	IC-CMOS	HEF 4021 B		3
IC 21	221 541	IC-CMOS	HEF 4049 BC		1
IC 22-24, 26	221 810	IC-CMOS	HEF 4050 BP		> 4
IC 18	221 771	IC-CMOS	HEF 4094		1
IC 19	221 813	IC-LINEAR	LM 339		1
D 1-16	221 114	SI-DIODE	1 N 4148		15
D 17	221 822	SI-DIODE	BA 157		1
D 4	221 539	TRANSZORB-DIODE	TVS 505		1
ZD 1	231 601	ZENER-DIODE	ZPD 7,5		1
LD 1, 2	231 475	LUMINESZENZ-DIODE	LTL-4223-021		2
T 2, 3	221 757	SI-TRANSISTOR	BC 547 B		2
T 9	221 492	SI-TRANSISTOR	BC 517		1
T1,4,5,8	221 549	SI-TRANSISTOR	BC 556 B		4

coinopmanuals.com

SPARE PARTS LIST

POS.	PART–No.	DESCRIPTION	DATA		QTY
C3,4,9,29,					>
60–63	220 481	CER.–CAPACITOR	0,1 µF		8
C 19	220 242	CER.–CAPACITOR	68 pF		1
C 26	220 342	CER.–CAPACITOR	100 pF		1
C 18	220 185	CER.–CAPACITOR	270 pF		1
C 47, 48	220 365	CER.–CAPACITOR	120 pF		2
C 37, 64	220 231	CER.–CAPACITOR	2200 pF		2
C 20	220 435	KT–CAPACITOR	4,7 nF		1
C 5–8,					>
10–17, 23,					>
28, 65–69	220 334	MKT–CAPACITOR	0,1 µF		20
C 21, 22	220 159	LYTIC	4,7 µF	63 V	2
C 24	220 162	LYTIC	10 µF	63 V	1
C 2	220 160	LYTIC	100 µF	10 V	1
C 1	220 250	LYTIC	100 µF	25 V	1
R 38	221 620	RESISTOR	22 Ohm	1/4 W	1
R 20, 25,					>
123–125,					>
132	221 600	RESISTOR	100 Ohm	1/4 W	6
R 122	221 099	RESISTOR	470 Ohm	1/4 W	1
R 30	221 621	RESISTOR	560 Ohm	1/4 W	1
R 11, 54	221 622	RESISTOR	820 Ohm	1/4 W	2
R9, 12, 13,					>
15, 36, 40	221 029	RESISTOR	1 KOhm	1/4 W	6
R 16, 35	221 031	RESISTOR	2,2 KOhm	1/4 W	2
R 1–3, 16,					>
28, 29,					>
108, 110	221 033	RESISTOR	3,3 KOhm	1/4 W	9
R26, 31–34,					>
41–43, 49,					>
51, 53, 119,					>
130, 131	221 034	RESISTOR	4,7 KOhm	1/4 W	14
R 5, 27	221 172	RESISTOR	8,2 KOhm	1/4 W	2
R8, 10, 14,					>
19, 23, 24,					>
45, 46, 50,					>
52, 107	221 035	RESISTOR	10 KOhm	1/4 W	11
R7, 21, 22,					>
39, 55, 56,					>
112–115,					>
120, 128,					>
129	221 604	RESISTOR	22 KOhm	1/4 W	13
R 6	221 601	RESISTOR	27 KOhm	1/4 W	1
R 47, 48,					>
57, 59, 60–					>
66, 75–82,					>
91–98	221 038	RESISTOR	47 KOhm	1/4 W	27
R 17, 37,					>
44, 127	221 048	RESISTOR	100 KOhm	1/4 W	4
R 121	221 273	RESISTOR	10 Ohm	1/2 W	1
RA 1–3	231 239	RESISTOR NETWORK	8 x 22 KOhm		3

coinopmanuals.com

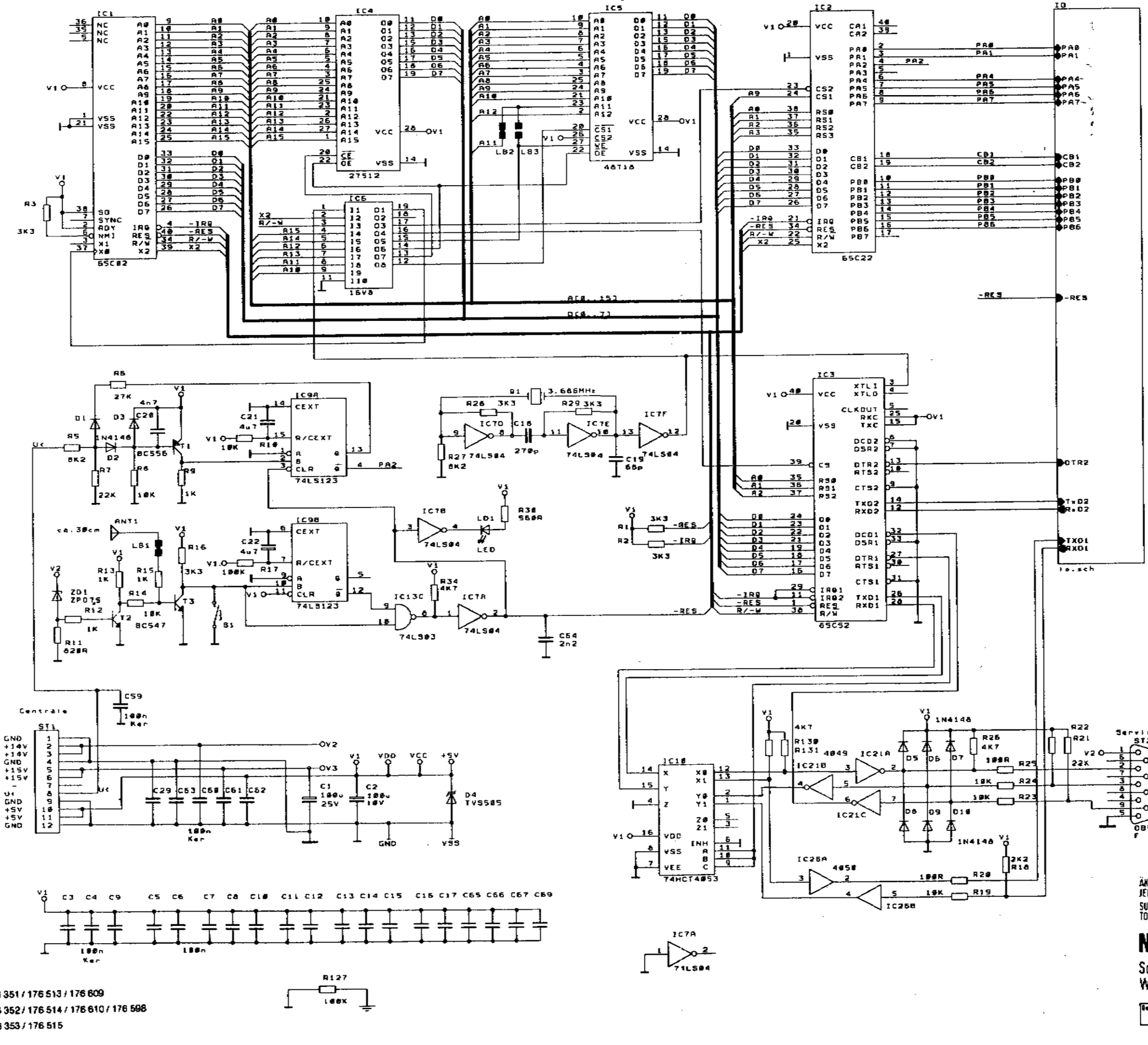

176 392 / 176 351 / 176 513 / 176 609
176 393 / 176 352 / 176 514 / 176 610 / 176 598
176 394 / 176 353 / 176 515
07/93

ÄNDERUNGEN IM SINNE DES TECHN. FORTSCHRITTES VORBEHALTEN, JEDOCH KEINE NACHRÜSTPFLICHT!

SUBJECT TO TECHNICAL MODIFICATION WITHOUT OBLIGATION TO MODIFY EQUIPMENT ALREADY DELIVERED!

NSM MUSIKAUTOMATEN PHONOGRAPHS **ES V-CD** TECHNOLOGY

Schaltbild
WIRING DIAGRAM

CONTROL UNIT

Date	Drawn	Check	Appr.
29.06.92	Braun		

Blatt 1 / Page 1

421/1

coinopmanuals.com

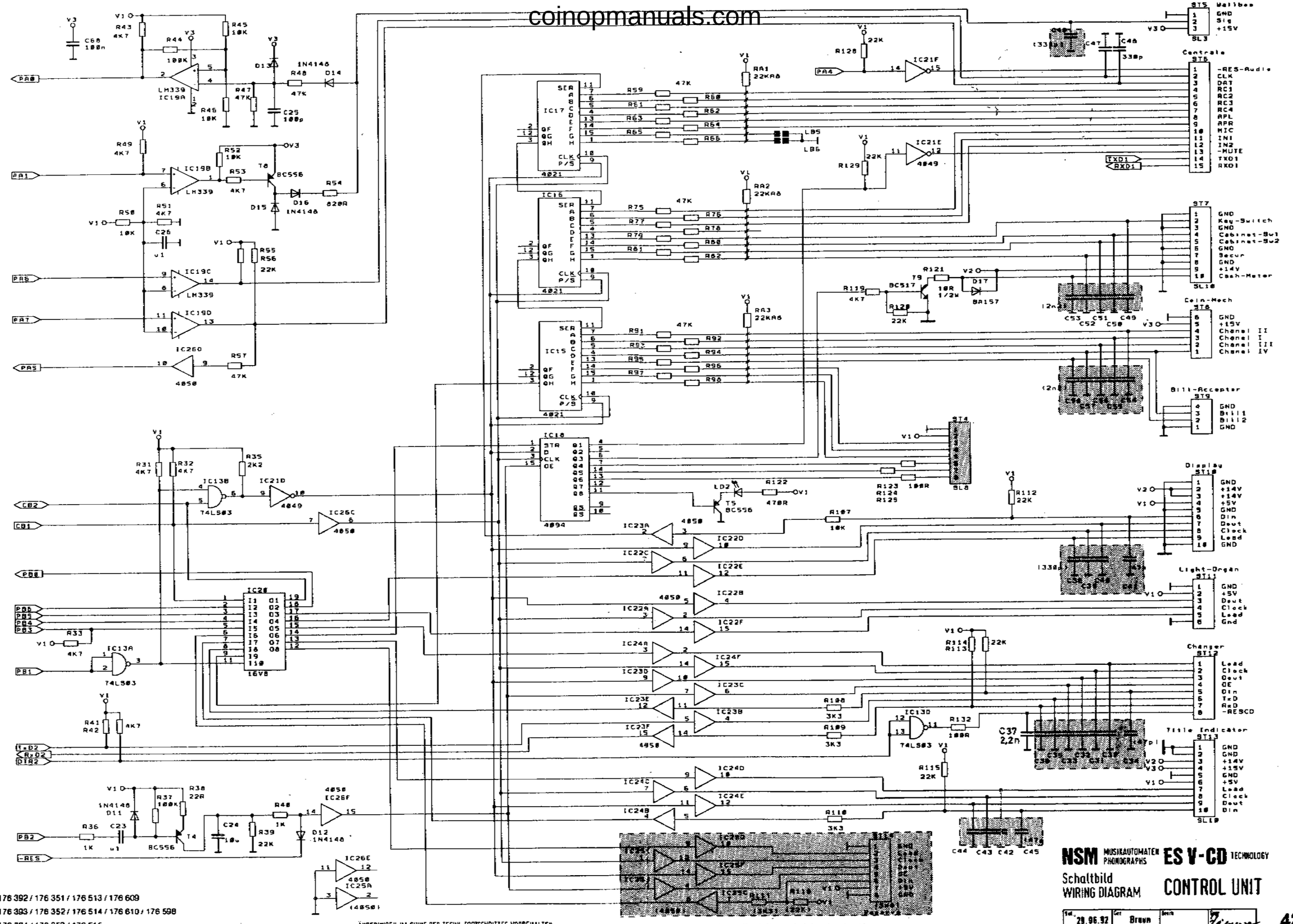

176 392 / 176 351 / 176 513 / 176 609
176 393 / 176 352 / 176 514 / 176 610 / 176 598
176 394 / 176 353 / 176 515
07/93

ÄNDERUNGEN IM SINNE DES TECHN. FORTSCHRITTES VORBEHALTEN, JEDOCH KEINE NACHRÜSTPFLICHT!
SUBJECT TO TECHNICAL MODIFICATION WITHOUT OBLIGATION TO MODIFY EQUIPMENT ALREADY DELIVERED!

gerasterte Bauteile sind nicht eingebaut!
DOTTED COMPONENTS ARE NOT INSTALLED!

NSM MUSIKAUTOMATEN PHONOGRAPHS **ES V-CD** TECHNOLOGY

Schaltbild
WIRING DIAGRAM

CONTROL UNIT

Tel.	Gez.	Bearb.	Sgn.
29.06.92	Braun		

Blatt 2 / Page 2

421/2

coinopmanuals.com

UNIT DESCRIPTION

DISPLAY / KEYBOARD

FOR NSM–PHONOGRAPHS

ES V–CD TECHNOLOGY

to
Technical information, ASSY

176 393	THE PERFORMER GRAND II
176 352	THE WIZARD/ OLD FASHION WIZARD
176 514	THE PERFORMER CLASSIC
176 610	CD HIDE–AWAY II
176 598	FIREBIRD II
176 705	THE PERFORMER WALL

N S M
Aktiengesellschaft
Saarlandstraße 240
55411 Bingen am Rhein

5

coinopmanuals.com

INDEX

1 FUNCTION
1.1 Display
1.2 Keyboard

Spare parts list

coinopmanuals.com

1 FUNCTION

1.1 Display

The shift registers IC 301 through IC 303 are the output ports for the display control.
The display is operated in the multiplex mode.
The segment information is prepared for one digit with IC 302 and IC 303 via drivers IC 308 and IC 309.
The transistors T 303 through T 305 are controlled by IC 307 via IC 301 and switch on the appropriate multiplex level for 4 milliseconds.

Resistors R 332 to R 345 determine the segment current.

Lamps L 1 to L 5 are controlled statically via IC 307, Pin 12 and 14 and IC 306, Pin 19, 11, 12.
Resistors R 325 to R 329 limit the transient current.

The load signal for the output shift registers is monitored by circuit IC 306, Pin 4 and 13; R 306; C 303; D 301.
During the duration of the load signal the display is dark.
C 303 is discharged via D 301 and IC 306, Pin 13.
OE of IC 301 to IC 303 becomes LOW and thereby inactive.
If no load signal occurs, OE becomes inactive via R 305.
Capacitor C 302 avoids lighting up of the digits after switching on.

1.2 Keyboard

IC 301 is an input port for the keyboard which is connected to plug ST 302.
The circuit with diodes D 302 – D 307 and transistors T 306, T 307 codes the keyboard matrix to a 4–bit signal combination.

SPARE PARTS LIST

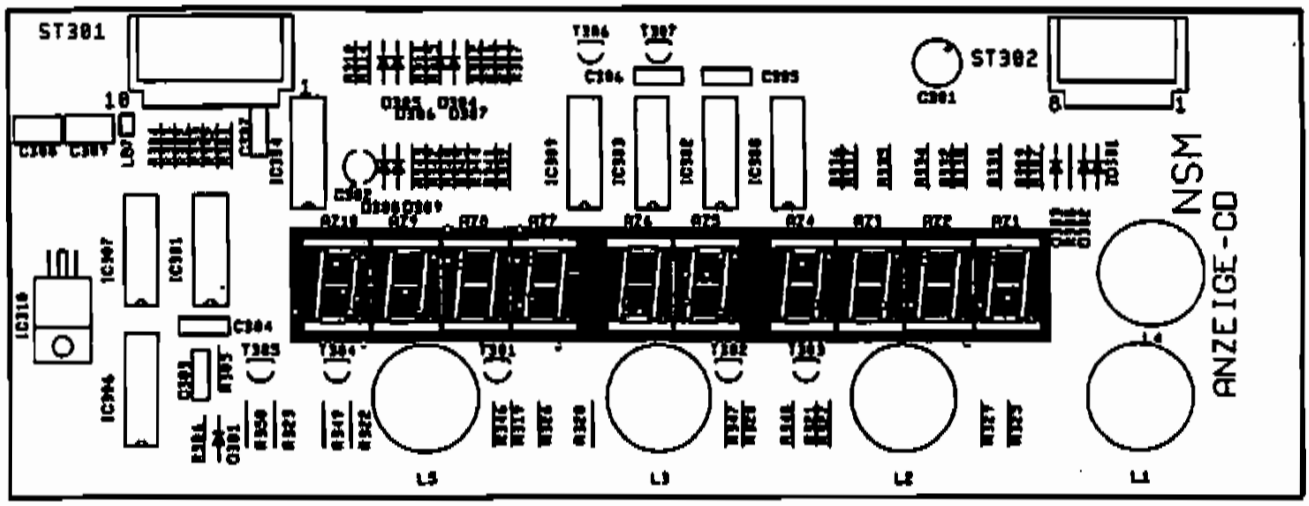

coinopmanuals.com

coinopmanuals.com

SPARE PARTS LIST

POS.	PART–No.	DESCRIPTION	DATA		QTY
	173 664	CB–DISPLAY CD. ASSY			1
ST 302	225 663	PIN PANEL	8 prongs	90°	1
ST 301	225 664	PIN PANEL	10 prongs	90°	1
AZ 1–10	231 416	DISPLAY	TD SL 5150		10
	176 413	TUBUS			1
	171 629	HOLDER			4
IC 310	221 573	IC–VOLTAGE	12 V 1 A		1
IC301–303	221 771	IC–CMOS	HEF 4094 B		3
IC 304	221 763	IC–CMOS	HEF 4021 B		1
IC306–309	221 497	IC–LINEAR	ULN 2003 A		4
D 301–309	221 114	SI–DIODE	1 N 4148		9
T301–305	231 240	SI–TRANSISTOR	BC 636 F		5
T306, 307	221 283	SI–TRANSISTOR	BC 212 B		2
C303–307	220 334	MKT–CAPACITOR	0,1 µF	63 V	5
C308,309	220 332	MKT–CAPACITOR	0,33 µF	63 V	2
C 302	220 249	LYTIC	1 µF	63 V	1
C 301	220 162	LYTIC	10 µF	63 V	1
R 301	221 611	RESISTOR	10 Ohm	1/4 W	1
R306, 332–350	221 627	RESISTOR	1,2 KOhm	1/4 W	> 20
R302–304, 307–309, 314–317, 354	221 033	RESISTOR	3,3 KOhm	1/4 W	> > > 16
R310–313	221 038	RESISTOR	47 KOhm	1/4 W	4
R 305	221 009	RESISTOR	1 MOhm	1/4 W	1
R325–329	231 366	MET.–RESISTOR	10 Ohm	1/4 W	5
L 1–5	225 533	LAMP SOCKET			5
	226 056	LAMPS	12 V 2 W		5
	173 900	DISPLAY, ASSY	12–fach		1

coinopmanuals.com

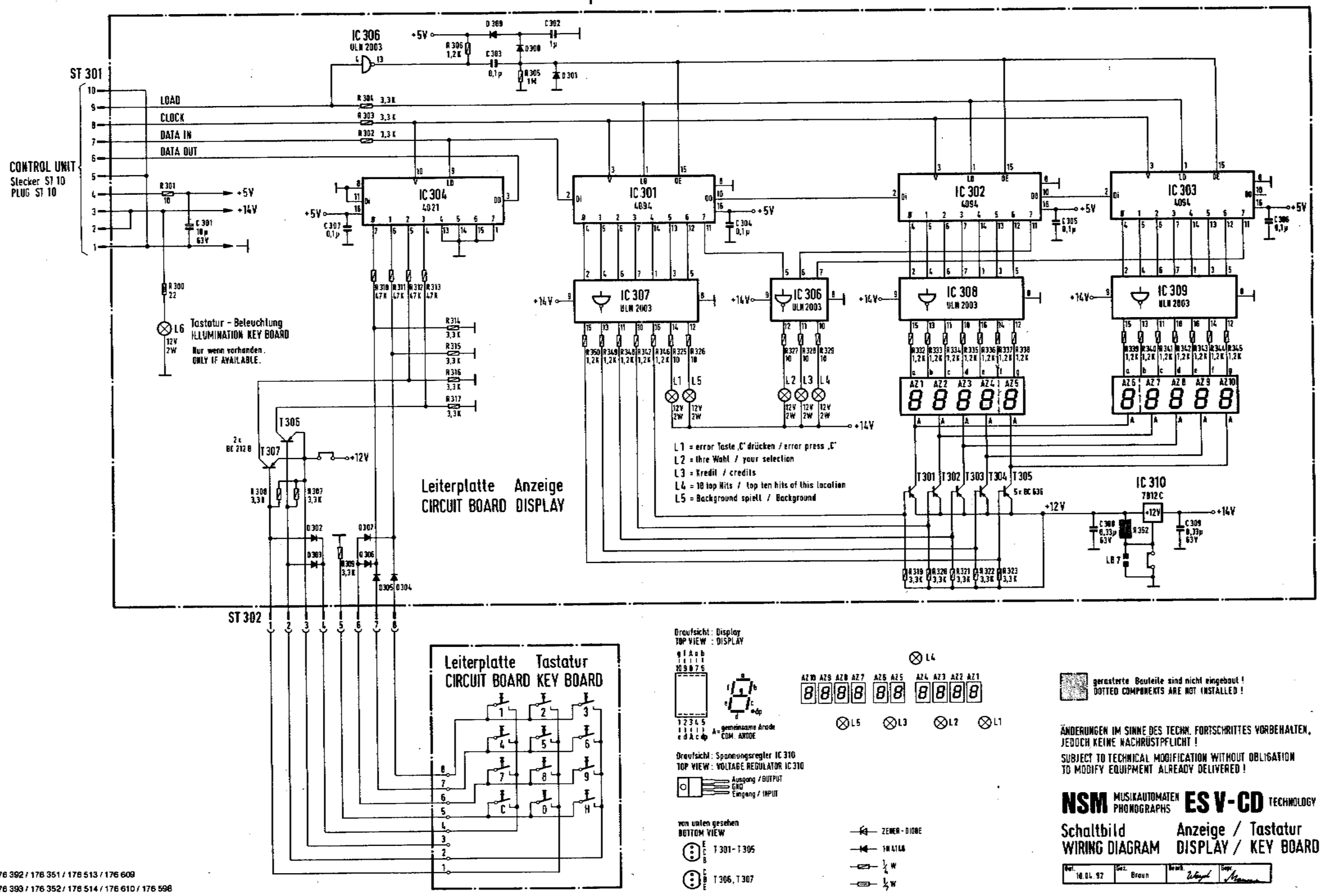

176 392 / 176 351 / 176 513 / 176 609
176 393 / 176 352 / 176 514 / 176 610 / 176 598
176 394 / 176 353 / 176 515
07/93

coinopmanuals.com

UNIT DESCRIPTION

CENTRAL UNIT

FOR NSM–PHONOGRAPHS

ES V–CD TECHNOLOGY

to
Technical Information, ASSY

176 393	THE PERFORMER GRAND II
176 352	THE WIZARD/ OLD FASHION WIZARD
176 514	THE PERFORMER CLASSIC
176 610	CD HIDE–AWAY II
176 598	FIREBIRD II
176 705	THE PERFORMER WALL

N S M
Aktiengesellschaft
Saarlandstraße 240
55411 Bingen am Rhein

6

coinopmanuals.com

INDEX

1 FUNCTION
1.1 Power Supply
1.2 Amplifier
1.3 Signal path
1.4 Adjustment of volume and sound characteristics
1.5 MIC socket, microphone connection
1.6 Tape recorder connection
1.7 Connection of auxiliary amplifier

2 Adjustment instructions for trimmer of central unit and output stage

3 Repair aid
3.1 Output stage
3.2 Tracing sound signal

coinopmanuals.com

1 FUNCTION

The power supply, fan controls, stereo amplifier with inputs for microphone, CD and tape are all integrated on one circuit board "CENTRAL UNIT".
The output stages and the fan are connected to the central unit via ST 4, ST 8, ST 9. The music power per channel is 200 watts when matched to a loudspeaker impedance of 2 ohms.

1.1 Power Supply

The power transformer supplies 22 V, 2 x 11,5 V and 2 x 43 V from three separate secondary coils.
The supply voltage for the output stages is supplied with 2 x 43 V by a two–way rectifier (D 1) and the center tap of the transformer.
The supply voltage for the voltage regulators VR1 (V3 = +15 V) and VR2 (+VA = +15 V) is supplied with 22 V by a bridge rectifier (D2–D5) from the transformer.
The supply voltage for the voltage regulators VR 3 (V1 = +5 V), VR 4 (+VM = + 10 V) are supplied with 2 x 11,5 V by a two–way rectifier (D6 / D8) and the center tap of the transformer.Appropriate the supply voltage for VR 5 (–VM = –10 V) is supplied by D7 / D9 and the supply voltage for VR 6 (–VA = –15 V) is supplied by a voltage doubler D13, D14, D15 and C20 from the same cods of the transformer.

Fusing is accomplished with
Si 1, Si 2 = 6,3 A for the voltage V Amp.
Si 3, Si 4 = 3,15 A for voltages V1, V2, +VM, –VM, –VA
Si 5 = 2,5 A for voltages V3, V4, +VA

The LED's indicate at the same intensity the following supply voltages:
LED 1 = +28 V (V4)
LED 2 = +14 V (V2)
LED 3 = –14 V
LED 4 = –22 V
LED 5 = +60 V (V Amp.).

The TRIAC TC 1 controls the output stage fan depending upon the operational state of the amplifier (REJECT); i.e. the fan only runs when the amplifier is not muted.

1.2 Amplifier

The stereo amplifier is build up with a siemens audio processor TDA 4390 with 3 quadruple OpAmps 54 diodes, 23 transistors and 6 voltage regulators.
The output stage is designed without induction coils or transformers and is therefore ironless.
At full volume level the music power is 200 watts per channel.

1.3 Signal path

The input signals
- MIC is connected via the microphon amplifier IC 4 B and the background mixer IC 4 A to Pin 3 (right channel) and Pin 26 (left channel)
- TB is connected via the pre–amplifiers IC 3 C respectively IC 3 D to Pin 2 (right channel) and Pin 27 (left channel)
- CD (symmetrical inputs) is connected via the pre–amplifiers IC 3 A respectively IC 3 B to Pin 1 (right channel) and Pin 28 (left channel)

of the input selection circuit of the audio processor.

coinopmanuals.com

When the microphone switch is actuated (Pin 5 of socket MIC to GND) the MIC is switched precedencely. That means TB or CD are interrupted.

Beginning at a level higher then 3 mV of the signal, the TB input is automatically active, if there is no CD played or no microphone switched 1 on. The control circuit is build with IC 4 C and IC 4 D.

On output BU 4 / BU 5 (Out R / Out L) a signal is served to steer towards an additional amplifier.

Via an AVC–stage (automatic volume control), the switch for MONO, STEREO and S–STEREO the audio signal reaches the sound control network and the volume stage of the I^2C–bus controlled audio processor. The output signals of this processor (Pin 13 / Pin 16) are connected to the inputs of the driver stage T 4 and T 6.

The parallel complementary power Darlington transistors T 151 through T 154 in the output stage allow a minimum loudspeaker impedance of 2 ohms.
Quiescent current compensation and thermic stabilization is accomplished with T 150, the quiescent current setting with TR 250. The amplifier is equipped with two protective circuits against overload mismatching and thermic overload.
T 155 acts as a threshold switch for the electronic fuse. When the emitter current of the output transistors exceeds a certain value, T 8 or T 9 is switched through by T 155 and reduces the volume via the control unit. The actuation of the electronic fuse is controlled by the control unit.
When its fuse is tripped a number of times within a certain period, the volume is reduced automatically by one step each time until the electronic fuse is no longer activated.

The terminating impedance at the loudspeaker output should not be less than 2 ohms. In the case of mismatching (less than 2 ohms), or short–circuit in the loudspeaker cable, the limiting circuit is actuated.
The result is distorted sound reproduction or reduction of the volume. After elimination of the mismatch the amplifier is ready for operation and the volume can be readjusted.

The thermal switch on the heat sink switches off the power supply to the output stage when the heat sink temperature reaches approx. 90° C (cooling malfunctioning). LED 150 is dark. The switch–on point (following cooling down) is approx. 60° C (switch–on hysteresis).

coinopmanuals.com

1.4 Adjustment of volume and sound characteristics

Volume adjustment for normal play mode is done by use of the command P053 of the service programm. It is done separately for the right and the left channel:

keys "1" / "3" give more volume (left/right)
keys "7" / "9" give less volume (left/right)
keys "4" / "6" give a medium value (left/right) of the volume
keys "2" / "8" are controlling both channels (more/less).

Treble and Bass are controlled with P054 for both channels:

keys "1" / "7" more/less of bass key "4" medium value of bass
keys "3" / "9" more/less of treble key "6" medium value of treble.

The necessary adjustment depend on the given environmental conditions.

With the potentiometer POT 2 the volume of microphone signal is controlled and with potentiometer POT 1 the volume of sound while the microphone is active.
The adjustment of POT 2 depends on the distance between the phonograph and the microphone (feedback!)

The switch S1 is for selecting:

MONO:	e.g. for separated music in different rooms.
STEREO:	normal position
S-STEREO:	base wide function

1.5 MIC socket, Microphone Connection

A dynamic microphone with an impedance of 200 ohms – 600 ohms with switch for relay control can be used.
NSM option accessories:

Microphone	Order No. 224 223	
Connection cable	Order No. 171 880	(length: 10 m)

1.6 Tape Recorder Connection

The TB socket (cinch) allows to record the music from the phonograph on a tape recorder as well as to play music from a tape recorder by the phonograph.

The AF signal (analog signal) for recording on a tape recorder is on BU 4 and BU 5 and can be connected directly with a stereo cable.
For playback of a tape via the phonograph BU 2 and BU 3 are used.

coinopmanuals.com

1.7 Connection of an additional Amplifier

An additional amplifier can be connected to BU 4 and BU 5.
The input sensitivity of the external amplifier should be 1 V at a minimum input impedance of 10 KOhms.

2 Adjustment Instructions for Trimmer of Central Unit and Output Stage

TR 150 for quiescent current adjustment of the output stage: The quiescent current must be set to 40 mA +5 mA when volume level is 0.
After replacement of the output transistor T 151 through T 154 a correction may be required. Therefore the fuse SI 150 or the thermal switch is to be replaced by an ampere–meter.

3 Repair Aid

Amplifier integrated in central unit ES V

Malfunction: No sound, no output power:
It is assumed that LED 1 to LED 5 light with the same intensity and that the power supply is therefore O.K., the CD is on the CD player being played, and normal volume was set in program step P053 to "31".

3.1 Output Stage

LED 150 on the output stage circuit board is dark. Malfunction probably located in the output stage; check SI 150 and replace if required. If the fuse blows again, the output transistors are defective.
Remove output stage unit, pull out cover plates on the bottom. Check for short–circuit on transistors T 151/T 152 T 153/T 154 with ohmmeter. Since the transistors are connected in parallel, it is only possible to test them in pairs.
For individual testing one transistor must be unsoldered from the defective pair. After replacement of the defective transistors the quiescent current must be readjusted with TR 150 according to the adjustment instructions.

coinopmanuals.com

3.2 Tracing Sound Signal

Trace the sound signal arriving at CD plug according to the table below.
The point where the signal is missing is probably the cause of the malfunction.

NF Signal Point	Cause of Malfunction When Signal Missing
IC 1, PIN 1 or PIN 28	IC 3
IC 1, PIN 5 or PIN 24	IC 1
IC 1, PIN 6 or PIN 23	IC 2 (AVC)
IC 1, PIN 13 or PIN 16	IC 1
T 5 / T 7 (collector)	T 4, T 6, T 5, T 7

If the signal is there up to T 5, T 7, but no output signal arrives at the output stage, plug connectors ST 8 / ST 9 as well as the output stage have to be checked.

coinopmanuals.com

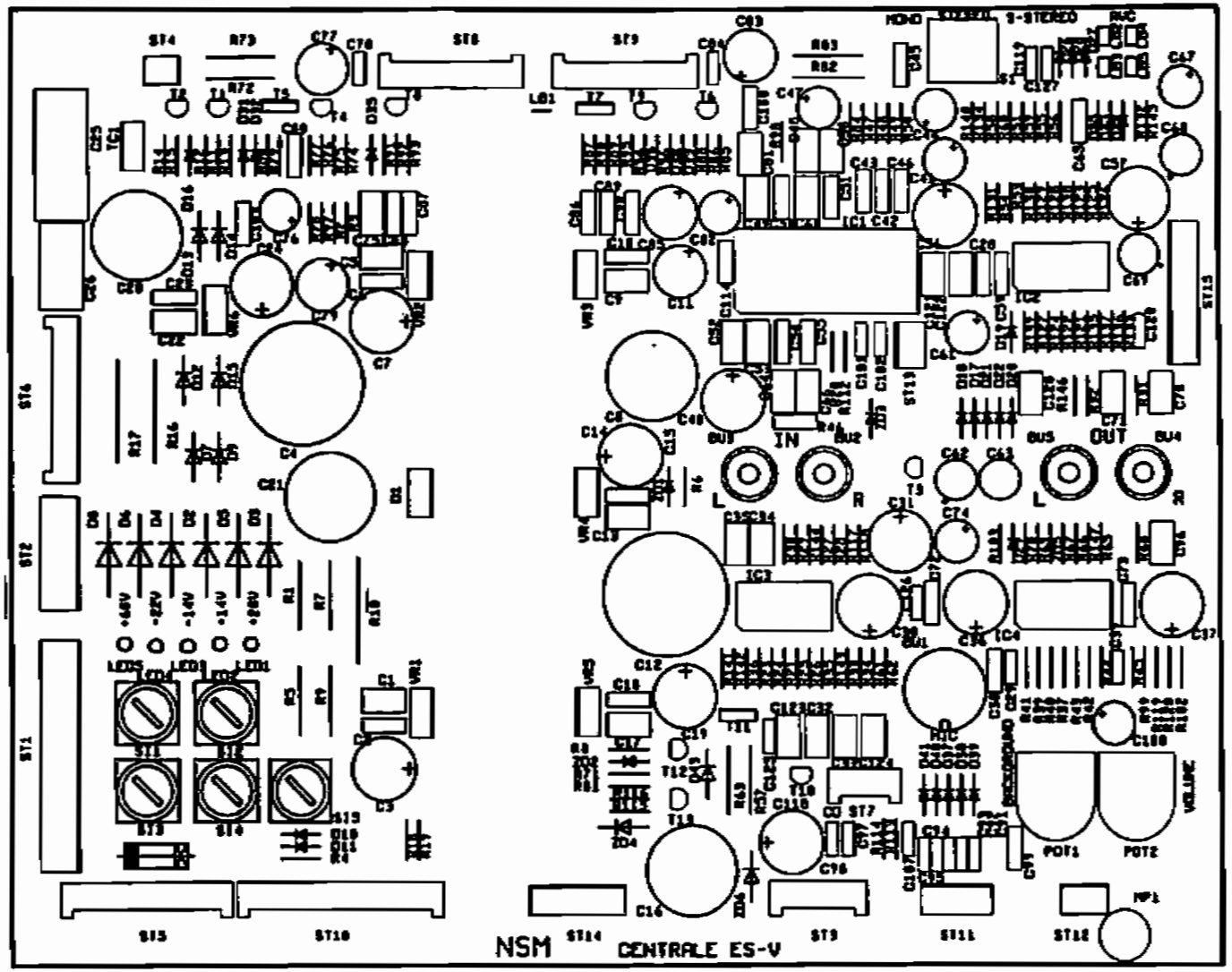

coinopmanuals.com

SPARE PARTS LIST

POS.	PART–No.	DESCRIPTION		DATA		QTY
	176 326	**CENTRALE ES V. ASSY**		**50 Hz**		1
Si 5	225 538	FUSE		T 2,5 A		1
Si 3, 4	225 029	FUSE		T 3,15 A		2
Si 1, 2	225 374	FUSE		T 6,3 A		2
	225 747	CAP				5
	176 327	**CENTRALE ES V. ASSY**		**60 Hz**		1
Si 5	225 222	FUSE		2,5 A		1
Si 3, 4	225 225	FUSE		3,2 A		2
Si 1, 2	225 218	FUSE		6,25 A		2
	225 748	CAP				5
	150 687	COOLING PLATE				2
	225 746	FUSE HOLDER				5
	173 698	PROFILE, ASSY				1
	171 629	HOLDER				2
BU 1	225 244	SOCKET		S 5 prongs		1
BU 2–5	225 986	RCA–SOCKET		BTOR 1 L		4
S 1	222 550	SLIDE SWITCH		25149 NLDH 6		1
ST 2	235 042	PIN PLUG	RM 3,96	6 prongs		1
ST 1	235 045	PIN PLUG	RM 3,96	12 prongs		1
ST 4	225 439	PIN PLUG	RM 2,5	3 prongs		1
ST 12	225 418	PIN PLUG	RM 2,5	4 prongs		1
ST 11	225 443	PIN PLUG	RM 2,5	6 prongs		1
ST 14	225 444	PIN PLUG	RM 2,5	8 prongs		1
ST 7	225 651	PIN PANEL	RM 2,5	4 prongs		1
ST 3	225 711	PIN PANEL	RM 2,5	6 prongs		1
ST 8, 9	225 654	PIN PANEL	RM 2,5	10 prongs		2
ST 5, 6	225 714	PIN PANEL	RM 2,5	12 prongs		2
ST 10	225 656	PIN PANEL	RM 2,5	15 prongs		1
VR 3, 4	221 572	IC–VOLTAGE		+ 5 V	1 A	2
VR 5	221 537	IC–VOLTAGE		– 5 V	1 A	1
VR 1, 2	221 476	IC–VOLTAGE		+15 V	1,5 A	2
VR 6	231 498	IC–VOLTAGE		–15 V	1,5 A	1
	222 447	IC–SOCKET		28 prongs		1
IC 1	231 540	IC–LINEAR		TDA 4390		1
IC 2–4	231 355	IC–LINEAR		TL 074		3
TC 1	231 028	TRIAC		TIC 206 D		1

coinopmanuals.com

SPARE PARTS LIST

POS.	PART–No.	DESCRIPTION	— DATA		QTY
D 10, 11,					>
16–20,					>
31–41	221 114	SI–DIODE	1 N 4148		27
D 7, 9, 12–					>
15, 42,					>
43	221 115	SI–DIODE	1 N 4004		8
D 2–6, 8	221 463	SI–DIODE	BY 251		6
D 1	231 202	SI–DUO–DIODE	BYV 32/100		1
ZD 1–3, 5	231 079	ZENER–DIODE	ZPD 4,7		4
ZD 4	221 464	ZENER–DIODE	ZY 15		1
ZD 6	221 406	ZENER–DIODE	ZY 12		1
LED 1–5	231 475	LUMINESZENZ–DIODE	LTL–4223–021		5
T 11	221 777	SI–TRANSISTOR	BD 679		1
T 5, 7	221 486	SI–TRANSISTOR	BD 139–10		2
T 12, 13	221 485	SI–TRANSISTOR	BC 546		2
T 1, 3,					>
8–10	221 757	SI–TRANSISTOR	BC 547 B		5
T 2, 4, 6	221 459	SI–TRANSISTOR	BC 556 B		3
C 29, 39,					>
73, 125–					>
128	220 266	CER.–CAPACITOR	27 pF		7
C 80, 86	220 185	CER.–CAPACITOR	270 pF		2
C 72, 78,					>
84, 91–95,					>
119, 120	220 341	CER.–CAPACITOR	4700 pF		10
C 2, 6, 10,					>
14, 18, 23,					>
38, 41, 42,					>
44, 45, 50,					>
51, 54, 55,					>
59, 65, 67					>
–90, 99,					>
114	220 334	MKT–CAPACITOR	0,1 µF	63 V	23
C 1, 5, 9,					>
13, 17, 22,					>
28, 32–35,					>
48, 49, 52,					>
53, 58, 60,					>
64, 66, 70,					>
71, 75, 81,					>
96, 121–					>
124	220 332	MKT–CAPACITOR	0,33 µF		28
C 107	220 335	MKT–CAPACITOR	22 nF		1
C 26	220 336	MKT–CAPACITOR	2,2 µF		1
C 25	220 460	MKT–CAPACITOR	3,3 µF		1
C 101, 102	220 400	KT–CAPACITOR	1500 pF		2

coinopmanuals.com

SPARE PARTS LIST

POS.	PART–No.	DESCRIPTION	DATA		QTY
C 61, 67					>
108	220 249	LYTIC	1 µF	63 V	3
C 76, 82	220 159	LYTIC	4,7 µF	63 V	2
C 47	220 162	LYTIC	10 µF	63 V	1
C 74, 77,					>
83	220 158	LYTIC	47 µF	40 V	3
C 118	220 247	LYTIC	47 µF	63 V	1
C 11	220 160	LYTIC	100 µF	10 V	1
C 3, 7, 15,					>
19, 24, 30,					>
31, 36, 37,					>
40, 56, 57	220 250	LYTIC	100 µF	25 V	12
C 79, 85	220 390	LYTIC	100 µF	40 V	2
C 16, 20	220 281	LYTIC	1000 µF	25 V	2
C 21	220 289	LYTIC	1000 µF	40 V	1
C 8	220 283	LYTIC	2200 µF	25 V	1
C 12	220 286	LYTIC	4700 µF	25 V	1
C 4	220 287	LYTIC	4700 µF	40 V	1
C 62, 63,					>
68, 69	220 243	LYTIC, TANTAL	100 µF	3 V	1
R 80, 90	221 095	RESISTOR	6,8 Ohm	1/4 W	2
R 2, 21, 37,					>
51, 97, 98	221 611	RESISTOR	10 Ohm	1/4 W	6
R 78, 88	221 097	RESISTOR	82 Ohm	1/4 W	2
R 93, 96	221 600	RESISTOR	100 Ohm	1/4 W	2
R 71	221 614	RESISTOR	330 Ohm	1/4 W	1
R 112	221 100	RESISTOR	680 Ohm	1/4 W	1
R 15	221 622	RESISTOR	820 Ohm	1/4 W	1
R 3, 4, 6,					>
8, 43, 44,					>
65, 91, 94,					>
99, 116	221 029	RESISTOR	1 KOhm	1/4 W	11
R 79, 89	221 030	RESISTOR	1,5 KOhm	1/4 W	2
R 31, 32	221 031	RESISTOR	2,2 KOhm	1/4 W	2
R 18, 19,					>
20, 77,					>
87	221 033	RESISTOR	3,3 KOhm	1/4 W	5
R 27, 29,					>
54, 56,					>
115, 117–					>
122	221 034	RESISTOR	4,7 KOhm	1/4 W	11
R 134, 140	221 607	RESISTOR	6,8 KOhm	1/4 W	2
R 48, 50	221 172	RESISTOR	8,2 KOhm	1/4 W	2
R 11, 13, 14,					>
114, 125,					>
127	221 035	RESISTOR	10 KOhm	1/4 W	6
R131,133,					>
137, 139	221 036	RESISTOR	15 KOhm	1/4 W	4
R132,138	221 501	RESISTOR	18 KOhm	1/4 W	2

coinopmanuals.com

SPARE PARTS LIST

POS.	PART–No.	DESCRIPTION	DATA		QTY
R 12, 39,					>
40, 45,					>
68, 70,					>
113	221 604	RESISTOR	22 KOhm	1/4 W	7
R 67	221 037	RESISTOR	33 KOhm	1/4 W	1
R145,146	221 623	RESISTOR	39 KOhm	1/4 W	2
R23–26,28,					>
30,41,42,					>
58,69,92,					>
95,81,					>
129,130,					>
135, 136,					>
141–144	221 038	RESISTOR	47 KOhm	1/4 W	23
R 74, 84	221 039	RESISTOR	56 KOhm	1/4 W	2
R 47, 48,					>
53, 55	221 629	RESISTOR	68 KOhm	1/4 W	4
R 123, 124	221 044	RESISTOR	82 KOhm	1/4 W	2
R 75, 85,					>
126, 129	221 048	RESISTOR	100 KOhm	1/4 W	4
R 86, 76	221 045	RESISTOR	150 KOhm	1/4 W	2
R 66, 103	221 047	RESISTOR	330 KOhm	1/4 W	2
R 33–36,					>
59–62	221 049	RESISTOR	470 KOhm	1/4 W	8
R 147	221 009	RESISTOR	1 MOhm	1/4 W	1
R 102	221 982	RESISTOR	3,3 MOhm	1/4 W	1
R 57	221 161	RESISTOR	47 Ohm	1/2 W	1
R 72, 82	221 230	RESISTOR	470 Ohm	1/2 W	2
R 5, 7	221 183	RESISTOR	1 KOhm	1/2 W	2
R 73, 83	221 210	RESISTOR	1,5 KOhm	1/2 W	2
R 1, 9	221 184	RESISTOR	2,2 KOhm	1/2 W	2
R 63	221 213	RESISTOR	6,8 KOhm	1/2 W	1
R 10	231 232	WIRE WOUND RESISTOR	6,8 KOhm	1 W	1
R 16, 17	231 176	WIRE WOUND RESISTOR	0,22 Ohm	4 W	2
Pot 1, 2	231 553	TRIMMER RESISTOR	500 KOhm	0,15 W	2
	231 235	SHAFT	red		2

coinopmanuals.com

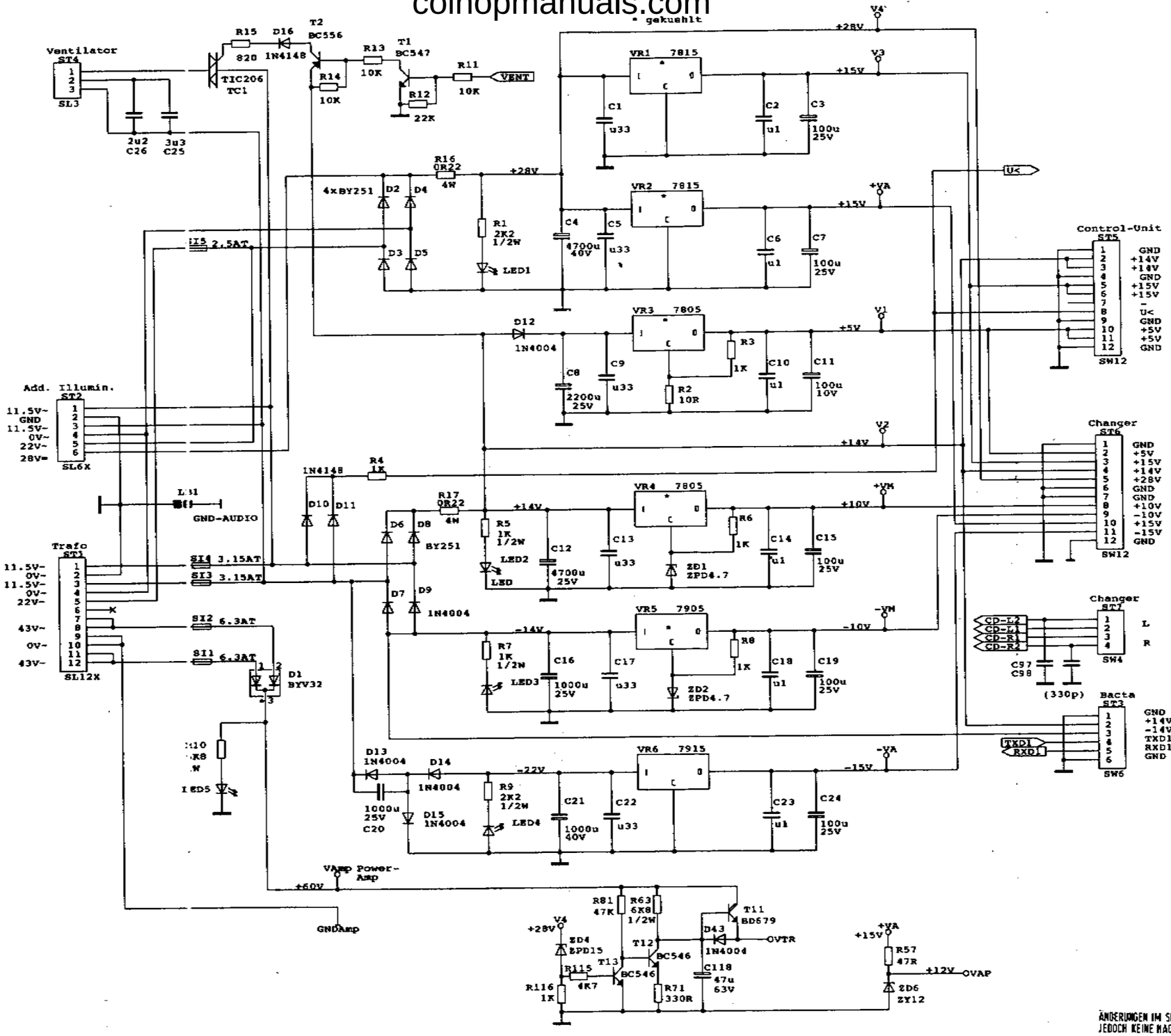

POWER - SUPPLY

ÄNDERUNGEN IM SINNE DES TECHN FORTSCHRITTES VORBEHALTEN, JEDOCH KEINE NACHRÜSTPFLICHT!

SUBJECT TO TECHNICAL MODIFICATION WITHOUT OBLIGATION TO MODIFY EQUIPMENT ALREADY DELIVERED!

NSM MUSIKAUTOMATEN PHONOGRAPHS **ES V-CD** TECHNOLOGY

Schaltbild
WIRING DIAGRAM

CENTRALE ESV

621/1

Tel	Zeichner	Name
07.09.93	Braun	

Blatt 1 / Page 1

176 392 / 176 351 / 176 513 / 176 608
176 393 / 176 352 / 176 514 / 176 610 / 176 596
176 394 / 176 353 / 176 515
09/93

coinopmanuals.com

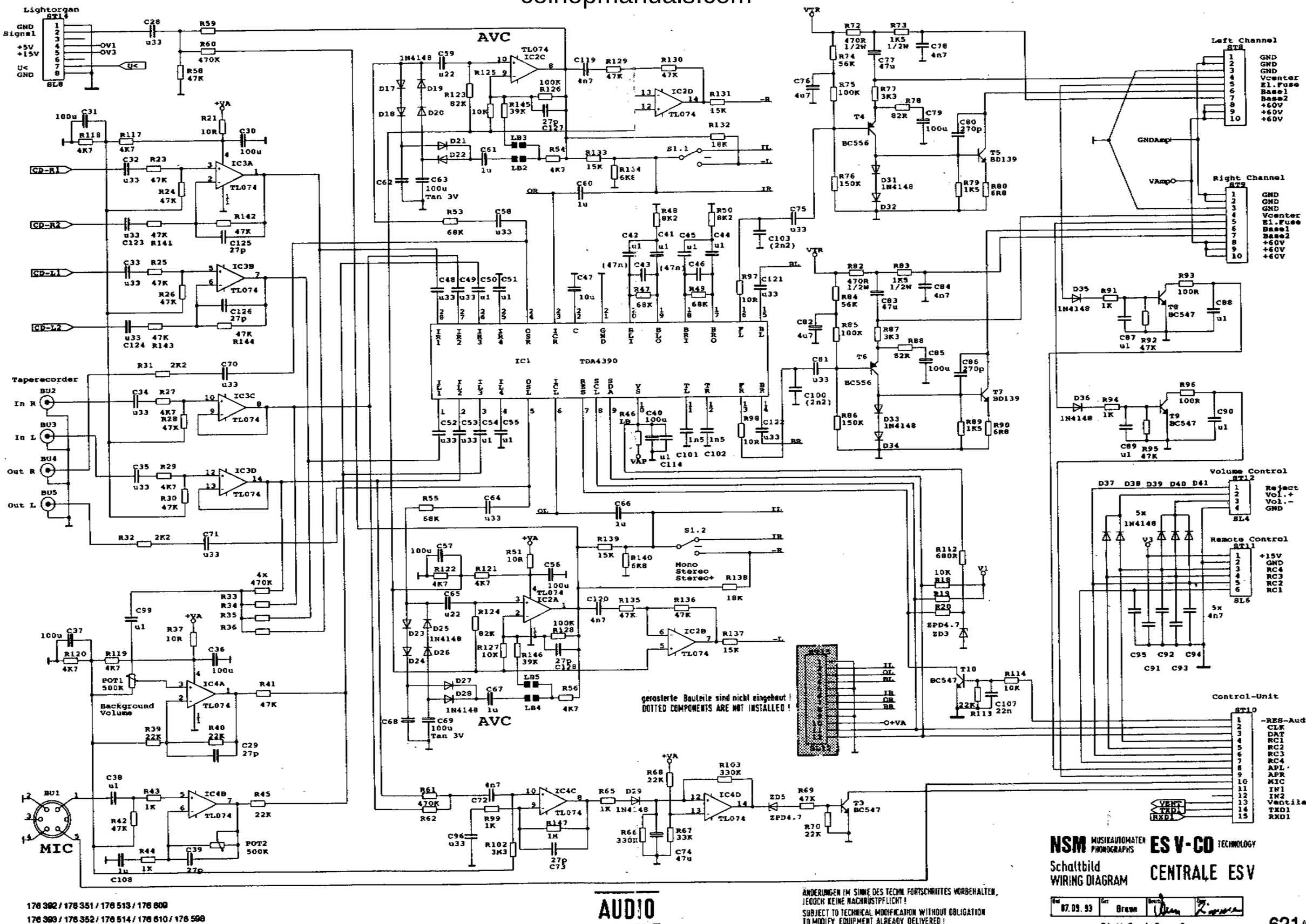

ÄNDERUNGEN IM SINNE DES TECHN. FORTSCHRITTES VORBEHALTEN, JEDOCH KEINE NACHRÜSTPFLICHT !
SUBJECT TO TECHNICAL MODIFICATION WITHOUT OBLIGATION TO MODIFY EQUIPMENT ALREADY DELIVERED !

176 392 / 176 351 / 176 513 / 176 609
176 393 / 176 352 / 176 514 / 176 610 / 176 598
176 394 / 176 353 / 176 515

coinopmanuals.com

UNIT DESCRIPTION

OUTPUT STAGE

FOR NSM–PHONOGRAPHS

ES V–CD TECHNOLOGY

to
Technical Information, ASSY

176 393	THE PERFORMER GRAND II
176 352	THE WIZARD/ OLD FASHION WIZARD
176 514	THE PERFORMER CLASSIC
176 610	CD HIDE–AWAY II
176 598	FIREBIRD II
176 705	THE PERFORMER WALL

N S M
Aktiengesellschaft
Saarlandstraße 240
55411 Bingen am Rhein

7

coinopmanuals.com

Output Stage

The output stage is designed without induction coils or transformer and is therefore ironless. At full volume the music power is 200 W per channel when connected to a 2–ohm loudspeaker impedance.

Functions such as power supply, signal path and settings as well as repair aids are described in detail in the unit description "CENTRAL UNIT".

SPARE PARTS LIST

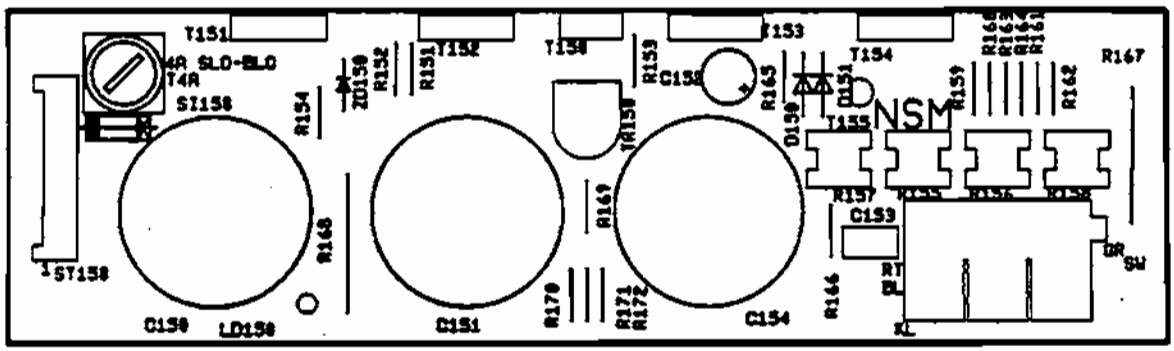

coinopmanuals.com

SPARE PARTS LIST

POS.	PART–No.	DESCRIPTION	DATA		QTY
	171 701	OUTPUT STAGE, ASSY	50 Hz		1
SI 150	225 036	FUSE	T 4 A träge		1
	225 747	CAP			1
	171 696	CHASSIS			1
	171 881	VENTILATOR, ASSY			1
	171 699	AIR VANE			1
	222 485	TEMPERATURE CONTROLLER			1
	171 704	CLAMP, STAMPED			2
	171 758	HOLDER			2
	250 177	COOLING PLATE			2
	171 759	COVER			2
		CB–OUTPUT STAGE			
	225 422	TERMINAL BAR	3 prongs		1
ST 150	225 654	PIN PANEL	10 prongs	sw	1
	225 746	FUSE HOLDER			1
D150,151	221 115	SI–DIODE	1 N 4004		2
ZD 150	221 650	SI–ZENER–DIODE	ZPD 33		1
LD 150	221 466	LUMINESZENZ–DIODE	CQY 65		1
T 150	221 883	SI–TRANSISTOR	NPN BD 239 B		1
T 155	221 459	SI–TRANSISTOR	PNP BD 256		1
T151,152	221 886	DARLINGTON–TRANSISTOR	NPN BDW 83 C		2
T153,154	221 902	DARLINGTON–TRANSISTOR	PDP BDW 84 C		2
C 153	220 333	MKT.–CAPACITOR	0,22 µF	63 V	1
C 152	220 162	LYTIC	10 µF	63 V	1
C 154	220 396	LYTIC	4700 µF	50 V	1
C150,151	220 436	LYTIC	4700 µF	63 V	2
R 166	221 094	RESISTOR	2,7 Ohm	1/4 W	1
R152,153	221 096	RESISTOR	56 Ohm	1/4 W	2
R 169	221 099	RESISTOR	470 Ohm	1/4 W	1
R159–162, 171	221 029	RESISTOR	1 KOhm	1/4 W	> 5
R163,164	221 034	RESISTOR	4,7 KOhm	1/4 W	2
R 154	221 625	RESISTOR	5,6 KOhm	1/4 W	1
R 165	221 604	RESISTOR	22 KOhm	1/4 W	1
R168	231 232	RESISTOR	6,8 KOhm	1 W	1
R151	221 627	RESISTOR	1,2 KOhm	1/4 W	1
R 167	221 276	WIRE WOUND RESISTOR	470 Ohm	1 W	1
R155–158	221 275	WIRE WOUND RESISTOR	0,22 Ohm	7 W	4
TR 150	221 305	TRIMMING POTENTIOMETER	2,2 KOhm	lin 0,1 W	1

coinopmanuals.com

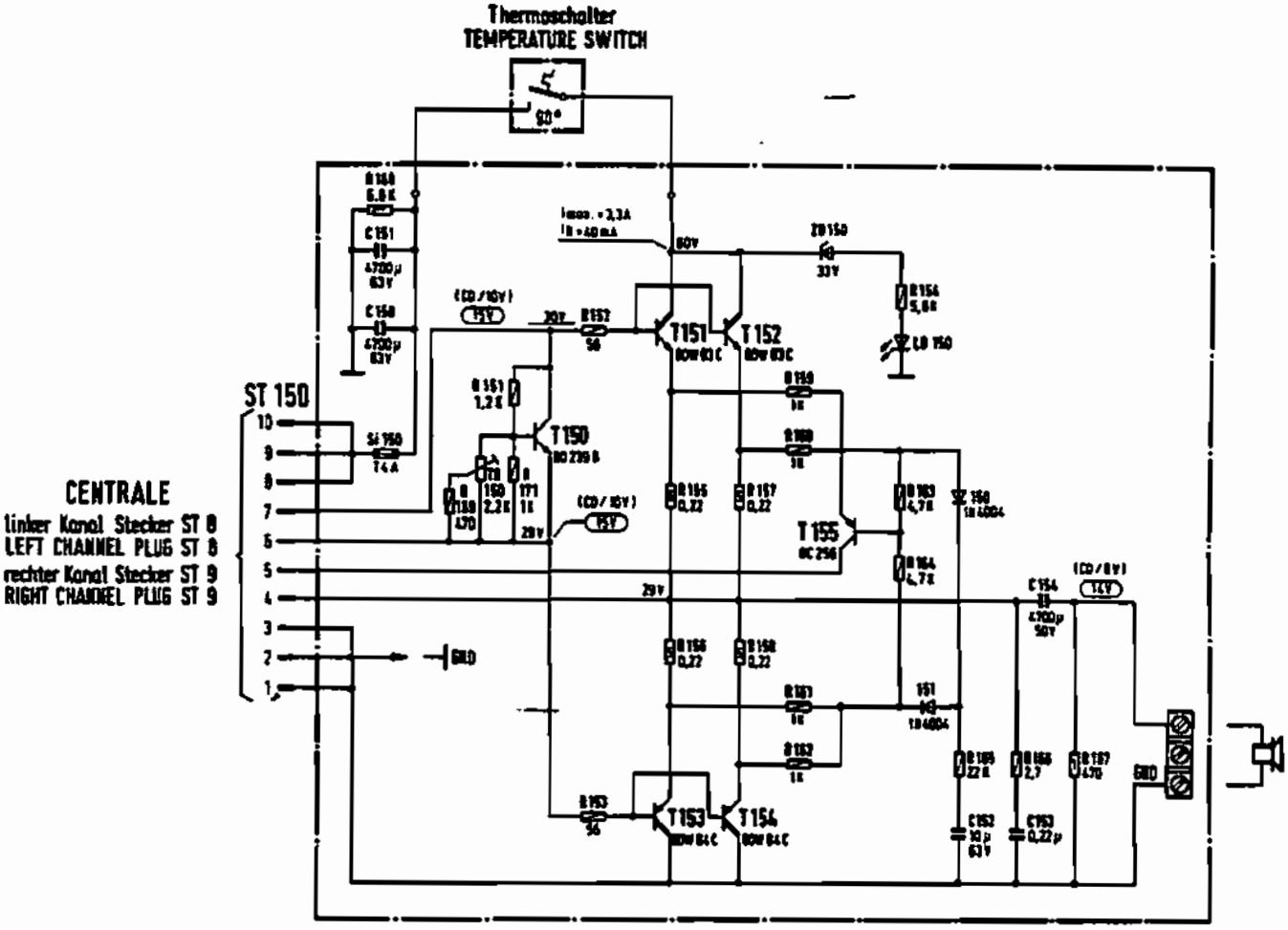

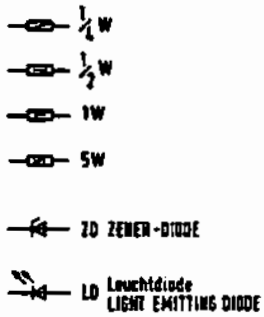

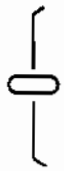

NF-Pegel bei 1KHz, Lautstärkesteller auf max.
Höhen und Bässe max., ohne (CD/mit) AVC gemessen mit elektron. Voltmeter.
Gleichspannung gemessen mit Voltmeter Ri = 10 MΩ

AC SIGNAL VOLTAGES AT 1000 cps, VOLUME CONTROL TO MAX. TREBLES AND BASSES MAX., WITHOUT (CD/WITH) AVC MEASURED WITH ELECTRONIC VOLTMETER.
DC VOLTAGES MEASURED WITH VOLTMETER Ri = 10 MEG OHMS.

Alle Sicherungen träge !
ALL FUSES SLO BLO !

Sicherungen nur durch solche mit gleichen Werten ersetzen !
REPLACE FUSES ONLY BY THOSE OF THE SAME VALUE !

ÄNDERUNGEN IM SINNE DES TECHN. FORTSCHRITTES VORBEHALTEN, JEDOCH KEINE NACHRÜSTPFLICHT !

SUBJECT TO TECHNICAL MODIFICATION WITHOUT OBLIGATION TO MODIFY EQUIPMENT ALREADY DELIVERED !

Draufsicht
TOP VIEW

T150

T151-T154

von unten gesehen
BOTTOM VIEW

T155

NSM MUSIKAUTOMATEN PHONOGRAPHS **ES V-CD** TECHNOLOGY

Schaltbild Endstufe
WIRING DIAGRAM OUTPUT STAGE

Dat.	Gez.	Geprüft	Gepr.
23.08.93	Braun	[illegible]	[illegible]

176 393 / 176 352 / 176 514 / 176 610 / 176 598 / 176 705

09/93

coinopmanuals.com

UNIT DESCRIPTION

CD CHANGER

FOR NSM–PHONOGRAPHS

ES V–CD TECHNOLOGY

to
Technical Information, ASSY

176 393	THE PERFORMER GRAND II
176 352	THE WIZARD/ OLD FASHION WIZARD
176 514	THE PERFORMER CLASSIC
176 610	CD HIDE–AWAY II
176 598	FIREBIRD II
176 705	THE PERFORMER WALL

N S M
Aktiengesellschaft
Saarlandstraße 240
55411 Bingen am Rhein

8

Page 801–814 / 821–822

coinopmanuals.com

INDEX

1 PICKUP FUNCTION
1.1 Transport
1.2 Pull holder
1.3 Return holder

2 PICKUP DRIVER
2.1 Lift control
2.2 Grip control

3 CD–PLAYER

4 PCB DECODER BOARD

5 MAGAZINE

6 CD CHANGER 100, test, set, adjust
6.1 GENERAL INFORMATION
6.2 MAGAZINE
6.3 PLAYING UNIT
6.4 LIFT

Spare parts lists

coinopmanuals.com

1 PICKUP FUNCTION

The pickup serves to transport the CD's between the magazines and the player.

1.1 Transport

The lift is moved via a stepping motor controlled by the microprocessor of the control unit. The distance between 2 CD slots is 8 motor steps (1 counter step of a light barrier).
During the run the light barrier OPTSP, which is directly connected to the drivewheel, checks the motor's position every 4 steps. Stepping errors are immediately recognized and displayed with "Er 73" on display 3.
Together with the light barrier OPEND the end position of the lift is verified. Should a mistake appear here (signal too late or to early) the display shows "Er 74".

1.2 Pull Holder

With both grip levers, brought into lock position by CD motors MOGRL for left and MOGRR for right, the CD holders with their CD's are pulled out of the magazine. The light barrier OPPUM reports the correct position of the CD holder in the pickup unit.
If there is no report 2 sec. after switching on the motor, the display will show "Er 71" for the left and right magazine.

1.3 Return Holder

To return a CD holder to its magazine, either motor MOGRL for the left magazine or MOGRR for the right magazine is switched on in the opposite direction.
Light barriers OPGRL or OPGRR report the end position of the grips.
If the report does not appear within 2 sec. after switching on the motor, the display shows "Er 71" for pull holder or "Er 72" for return holder.

coinopmanuals.com

2 PICKUP DRIVER

2.1 Lift Control

With output port of IC1 the microprocessor of the control unit controls the switch transistors T 1–4 via drivers T 5, T 6 and T 8, T 9. These drive the unipolar coil of the stepping motor (ST4, Pin 1–6).
The coil is supplied with a constant current. The current control is done with the current sensor resistors R 44 and R 54 via transistors T 7 and T 10.
The necessary current which depends on the running phase of the stepping motor is switched via R 39, R 40 and R 49, R 50 and IC 1 by the microprocessor.
Using signal OPSTP (ST 5, Pin 2) the microprocessor controls the position of the motors.
Together with signal OPEND (ST 3, Pin 8) the end position of the lift is reported via input port of IC 3.

2.2 Grip Control

Both of the grip motors (MOGRL for the left magazine and MOGRR for the right magazine) are driven from the double motor bridge IC 4 via the output port of IC 2.
While pulling a CD from the magazine the signal OPPUM (ST 3, Pin 7) reports the end position of the CD holder in the pickup to the microprocessor of the control unit.
While returning the CD it recognizes the end position of the grips via signals OPGRL (ST 3, Pin 5) for left and OPGRR (ST 3, Pin 6) for right.

coinopmanuals.com

3 CD PLAYER

The disc–player "CDM 4" contains the components laser diode, play motor, radial motor, and focus unit. It reads the data from the CD. (The density is xxx bits per inch?).

4 PCB DECODER BOARD

The components servoprocessor, decoder, digital filter, DA converter and NF output driver are combined on the decoder board. The digital information read from the CD are transformed into the corresponding audio signal for the amplifiers.

5 MAGAZINES

2 equal magazines that are equipped with 50 CD holders each are in the CD changer. With CD holders it is to play 5–inch CD's.
The magazine can be fold out by pushing the corresponding release button to the center of the changer. The magazine can be taken out by pushing the corresponding button to the outside of the changer.
Equipping with or changing CD's can be done simply by taking out the respective CD holders, inserting the new CD into the holder and pushing it back till it locks in the magazine. For the transportation of a equipped magazine just pull the red transportation fixture of the lift axle through the center holes of all CDs in the magazine.

coinopmanuals.com

6 CD CHANGER 100,
test, set, adjust

6.1 GENERAL INFORMATION

Please note the illustration of the CD changer on the last page and the informations about the command P 157 in the chapter "Programming of the phonograph" regarding the following text.
After exchanging units their functions must be checked and, if needed, certain adjustments must be made.
To exchange the playing unit the CD changer can remain in the phonograph. But to remove or install the lift the changer has to be removed from the machine; tests and adjustments are only possible at a bench tester or at the machine with appropriate extensions!
Take care that the changer is set down on supports so that the board disc (12) or the main axle (14) which protrude from the cabinet floor are not pushed inside. Otherwise the board disc will jam the gear (2); a displaced axle changes the position of the upper distance sleeve so that the lift drives against it and blocks!

With help of the command P 157 (in the service and programming mode) "Test CD Changer" the grips can be moved left or right with Keys "4"/"5" or "6"/"5" and the lift can be moved up or down with key "2"/"8". With key "1" the CD player can be started and stopped.

For fine adjustments of the lift position the lift can be moved with Key "3" (+) or "9" (–) one motor step at a time (equals about 0,5 mm height difference) either up or down.
The distance between two magazine slots is 8 motor steps (or 1 step. of the light barrier).
In the displays the present status of the respective opto mask and the time in seconds during which the lift position is held are shown.

6.2 MAGAZINE

The magazines are supported by height–adjustable studs in fold–in and locked position. Changing the height setting can be necessary when the lift is exchanged; setting see Pt. 6.4 "Lift".

6.3 PLAYING UNIT

To exchange the playing unit with CD player
- remove both magazines
- pull lift up on gear belt
- remove 4 screws M4
- carefully (!) pick up playing unit, watch balance washers under cabinet
- open plug connections
- installation of playing unit in opposite sequence
- function test:
  - choose CD, check if CD is securely clamped in play position.
  - further tests see Pt. 6.4 "Lift".

coinopmanuals.com

6.4 LIFT

To exchange the lift as well as to check and adjust the optical coupling devices (light barrier) of the CD changer, completely remove the CD changer, disconnect cables, remove rear wall.

- From the rear side of the machine pull lift (04) up by the gear belt (02), interrupt connection between lift and gear belt by unscrewing the gear belt lock (03).
- Pull out plug of connecting cable (06).
- Remove board disc (12) after removal of washer.
- Pull lower distance disc(s) (13) and rubber gasket of main axle (14) from cabinet floor upwards.
- Push main axle down until lower rubber gasket can be removed.
- Remove lift; mount exchange lift in opposite sequence.
- Function test, basic setting; CD changer must be completely connected to operate either with extensions to phonographs or a bench tester:
  - After entering the service mode call the command P 157. On display 2 the corresponding number of the test "F8" is displayed. Now the different functions can be tested according to the scheme shown below.
    The control is done via the keys of the operating panel.

Movement of the lift:

1	2 Lift up	3 Lift up, single steps
4 Grip left	5 Return holder	6 Grip right
7	8 Lift down	9 Lift down, single steps
C	0 Return holder, restore lift	H

CD positioned on the player:

1 CD player start/stop	2 >FF< fast forward then two times like 1	3 Play next track
4 Return CD grip last CD	5 CD player start/stop like 1	6 Return CD grip next CD
7	8 >FR< fast rewind	9 Play last track
C	0 Stop player return CD	H

The state of the light barriers are displayed on the displays 1 and 3.

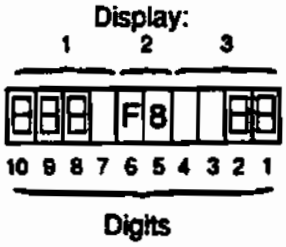

Digit 1:	Counter Wheel (OPSTP)
Digit 2:	Final Position (OPEND)
Digit 8:	Grip right (OPGRR)
Digit 9:	Middle Opto OPPUL/OPPUR
Digit 10:	Grip left (OPGRL)

Meaning of displays: light barrier lit up = "0", darkened = "1".

On Display 2 (Digit 5+6) code F8 will be displayed during the test. The test is stopped by pressing "C".

coinopmanuals.com

- The basic setting occurs in parked position at magazine slot 25/75. Drive pick–up to this position with keys "2" or "8".
  The lift is held after each function in this position for 2 sec.; with key "0" for 10 sec.
- Drive cassette in and out with Keys "4"/"5" or "6"/"5".
  Check function for smooth movement.
  The respective grip lever must fall into the cassette without hindrance!
- To adjust lift height loosen belt lock and move up or down; then tighten screws!
- Move lift down one motor step (about 0,5 mm height difference) with key "9" (–); same test for smooth movement.
- Drive to normal park position with key "0" and with key "3" (+); switch lift one motor step above normal position. Same check for smooth movement.
- Set magazine height: If magazine slots do not align with lift, then adjust lift only to one magazine at first. After that the other magazine is adjusted with support screw (11/15) to the correct height.
- The light barrier (08) on the step motor must be in parked position 25/75 in the center of the light barrier OPSTP (09) (status display of OPSTP in display = "1"). If necessary, loosen screw on hexagon bolt and set PCB with light barrier to center of mask.
- To check light barrier OPEND, lift must be driven down to bottom. Drive lift upwards manually or by pressing Key "3" 4 times one half opto step; the mask must release OPEND when OPSTP (09) opens the light mask, displayed by "0" on digit 1.
- Leave the service mode by pressing the housing switch.
- Select CD in normal play mode. In the parked position of the playing position the lift must have a gap to the lower end position.
- The distance between a cassette and the clamping dish should be at least 1 mm during a gripping procedure. So that the clamping dish can be magnetically attracted, the decorative cover must be in place.
- The CD must run without touch and grinding sounds when in a suspended position.
  To test the function get cassette with CD from magazine by pressing the corresponding keys and place it on CD player in play position.
  Turn on CD player with key "1". After the test is done, turn off CD player by pressing key "0" or any of the other function test keys. The clamping dish must clamp down the CD exactly in center.
- Check function of fork light masks OPGRR, OPGRL, OPPUM as per test "F8". The respective light mask must cover the light barrier in its entire breadth (when status display "1" is shown) and may not touch it physically.

coinopmanuals.com

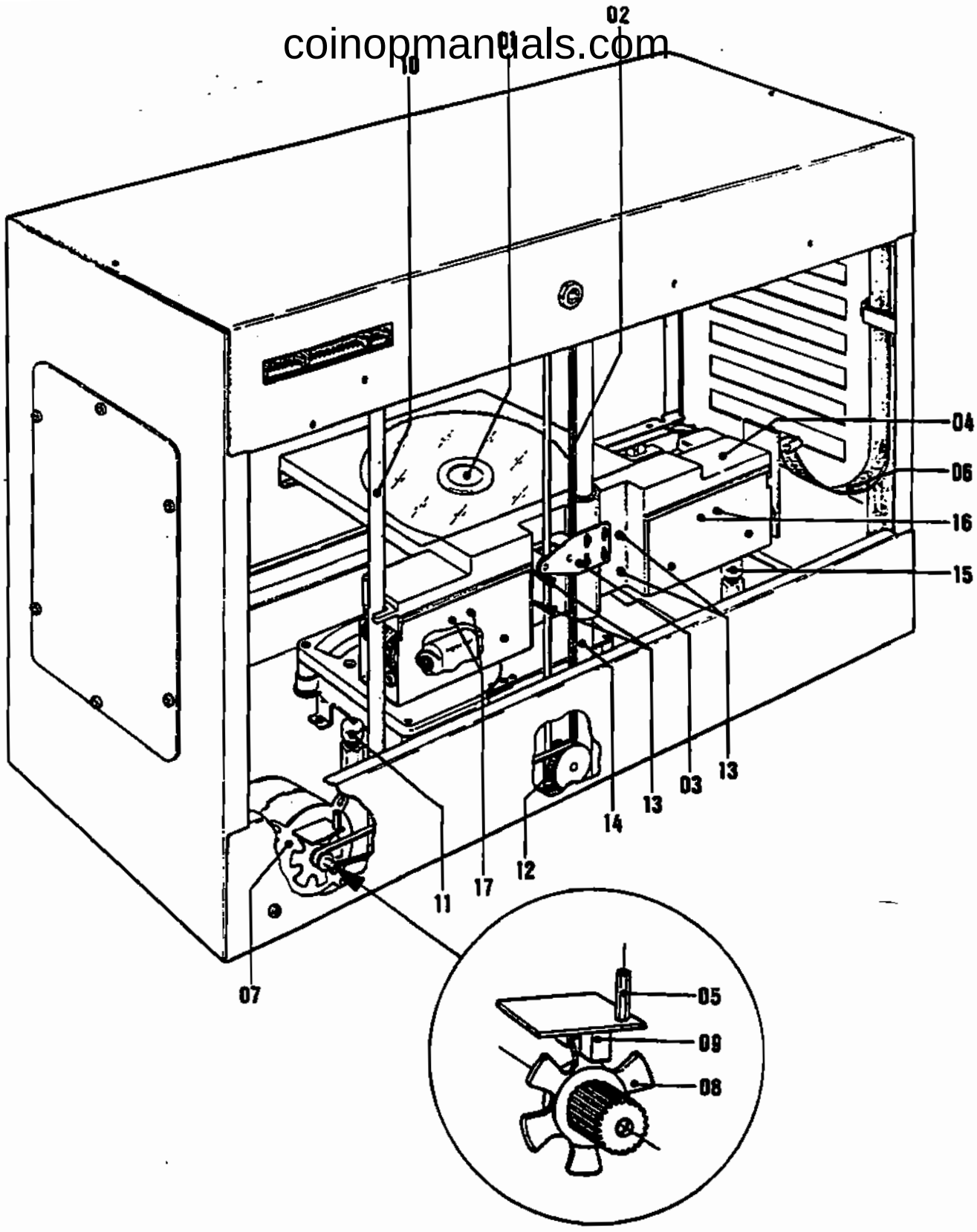

CD CHANGER, COMPL.

coinopmanuals.com

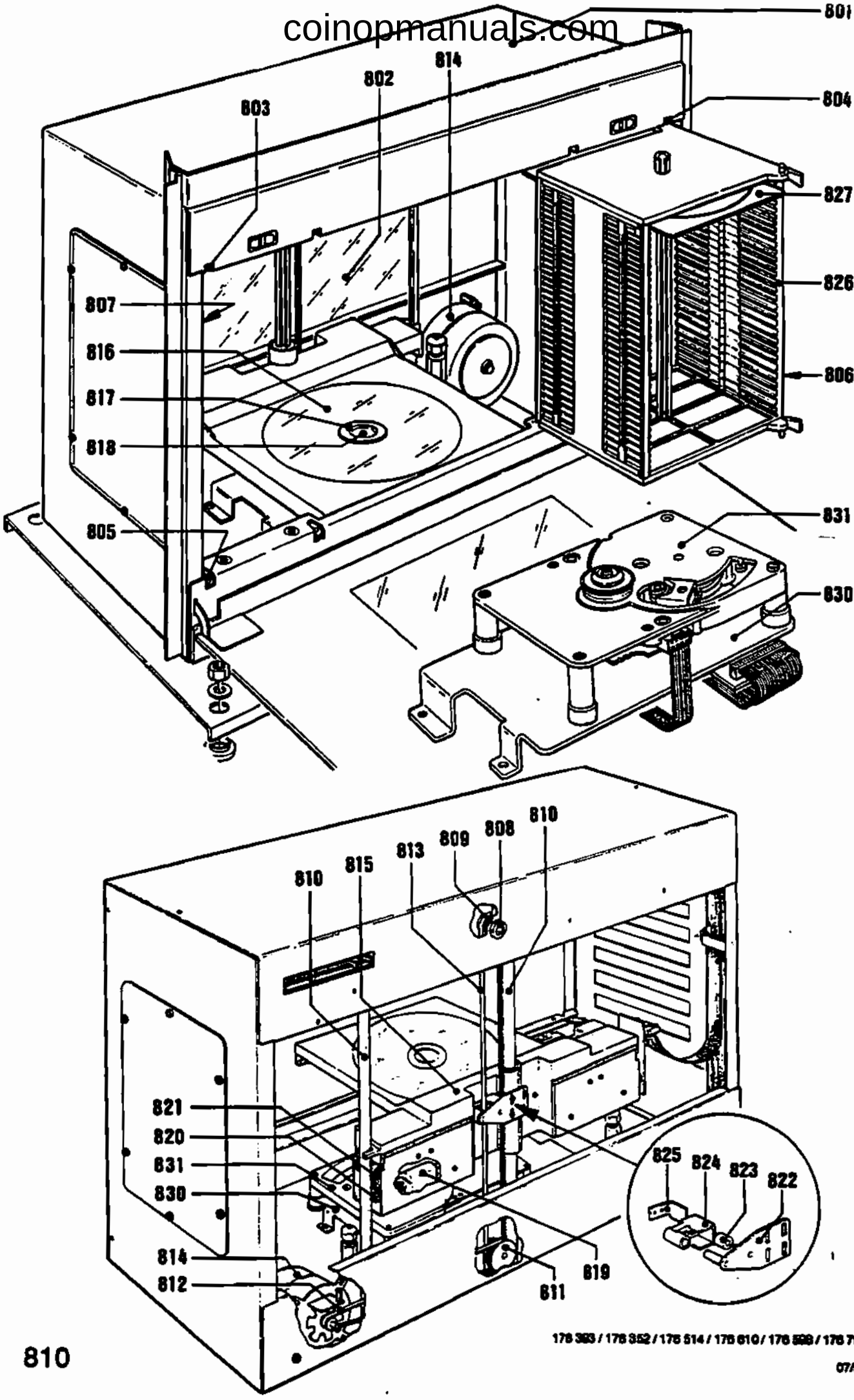

coinopmanuals.com

SPARE PARTS LIST

POS.	PART-No.	DESCRIPTION	DATA	QTY
see Page 100/...		CD-CHANGER 100 -CDM 4-	STANDARD	1
800				
801	176 320	CABINET, welded without SIDE PARTS, slotted		1
	175 733	CABINET, welded with SIDE PARTS, slotted		1
802	175 730	REAR WALL		1
803	175 913	CLOSING LEDGE, UPPER, LEFT, welded		1
804	175 914	CLOSING LEDGE, UPPER, RIGHT, welded		1
805	174 294	CLOSING LEDGE, LOWER, LEFT		1
806	174 295	CLOSING LEDGE, LOWER, RIGHT		1
807	206 655	CONNECTION AXLE		2
808	173 538	SCREW SLEEVE, ASSY		2
	173 526	BOARD WASHER		2
809	173 522	STEP WHEEL, MOUNTED		1
	173 521	WASHER 48		1
810	176 134	AXLE		2
811	173 530	BELT WHEEL, MOUNTED		1
812	206 644	BELT	Typ MXL 195	1
813	206 643	BELT	Typ MXL 298	1
814	176 299	STEPPER MOTOR, ASSY		1
815	175 735	LIFT, ASSY		1
	175 783	LIFT, welded		1
816	176 375	PROTECTIVE SCREEN, ASSY		1
817	175 777	CD-GUIDE		1
818	175 789	COVER		1
819	176 938	MOTOR, ASSY		2
820	175 762	GEAR, MOUNTED		2
821	206 902	BELT	Typ 30 S 2 M 426	2
822	176 298	HOLDING PLATE, riveted		1
823	206 975	DAMPING		1
824	176 293	LEVER		1
825	176 317	BRACKET		1
	173 491	MAGAZINE, LEFT, MOUNTED	(without Cassette)	1
826	173 499	MAGAZINE, RIGHT, MOUNTED	(without Cassette)	1
827	176 395	CASSETTE CD 120	only 10 piece	–
830	175 887	CHASSIS		1
831	176 725	SERVICE KIT -PLAYER CDM-4		1
	205 846	CLAMP		8
	210 486	CARDBOARD for MAGAZINE		1
	212 542	TRANSPORT DEVICES for CASSETTE and LIFT		2
	176 010	CB-CARRIAGE, ASSY	see Page 813	1
	176 249	CB-STEPPER, ASSY	see Page 813	1
	177 231	CB-DECODER BOARD, MOUNTED	OSDA CDM4 – NSM	1
	176 384	CB-DRIVER		1
	175 964	TRAILING CABLE		1
	206 943	CABLE HARNESS 1 CDM 4		1
	206 942	CABLE HARNESS 2 CDM 4		1

coinopmanuals.com

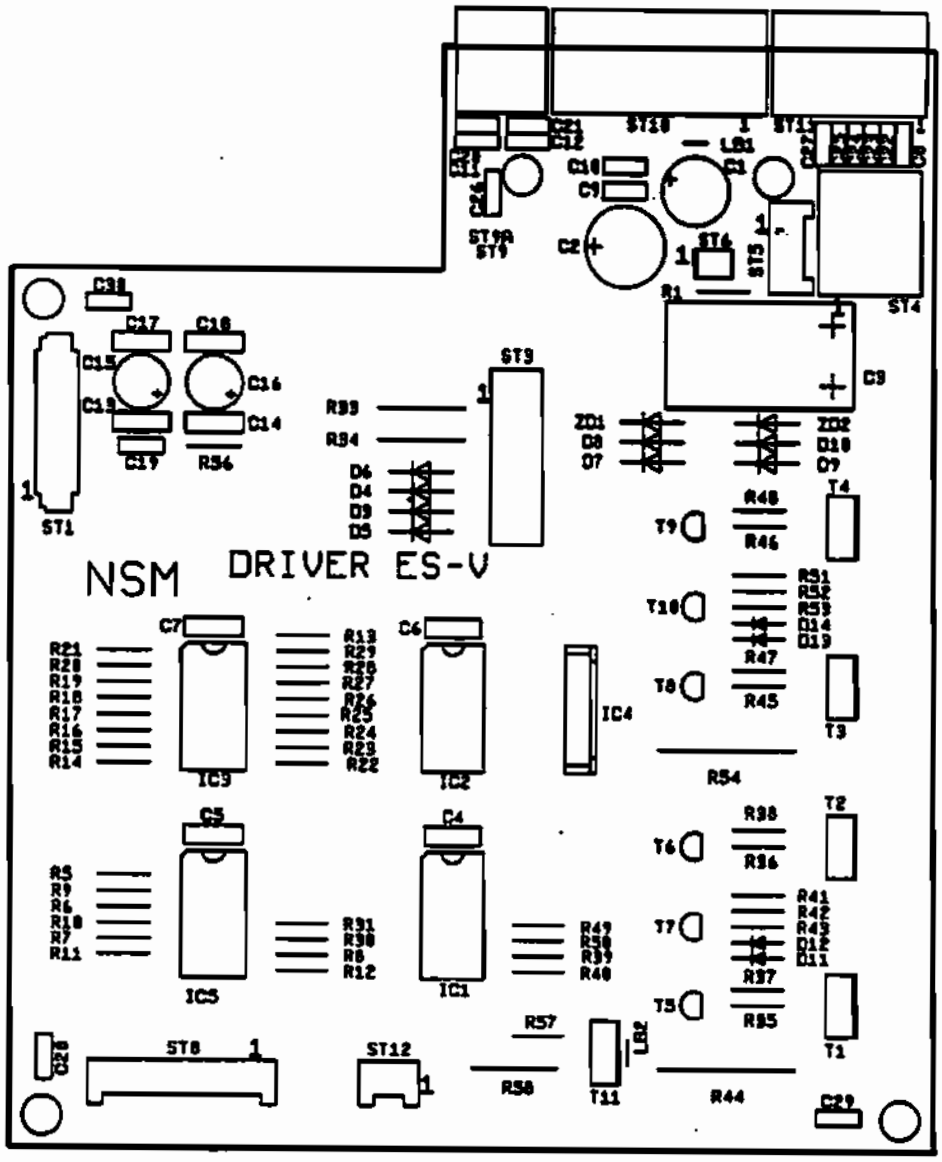

coinopmanuals.com

SPARE PARTS LIST

POS.	PART–No.	DESCRIPTION	DATA		QTY
	176 384	CB–DRIVER ES V. ASSY			1
	175 976	COOLING PLATE			1
ST 3	225 912	PIN PLUG AMP	14 prongs		1
ST 1	225 959	FLAT CABLE PLUG	15 prongs		1
ST 12	225 650	PIN PANEL	2 prongs		1
ST 5	225 651	PIN PANEL	4 prongs		1
ST 9	225 661	PIN PANEL	4 prongs	90°	1
ST 4	225 662	PIN PANEL	6 prongs	90°	1
ST 11	225 663	PIN PANEL	8 prongs	90°	1
ST 10	225 665	PIN PANEL	12 prongs	90°	1
IC 3	221 763	IC–CMOS	HEF 4021 B		1
IC 1, 2	221 771	IC–CMOS	HEF 4094 B		2
IC 4	231 303	IC–LINEAR	L 298		1
D 15–17	221 115	SI–DIODE	1 N 4004		4
D 11–14	221 114	SI–DIODE	1 N 4148		4
D 3–10	221 822	SI–DIODE	BA 157		8
ZD 1, 2	231 326	ZENER–DIODE	ZY 24		2
T 5–10	221 757	SI–TRANSISTOR	BC 547 B		6
T 1–4, 11	231 150	SI–TRANSISTOR	TIP 130		5
C 8	220 342	CER.–CAPACITOR	100 pF		1
C 9–12	220 274	CER.–CAPACITOR	330 pF		4
C 20, 21	220 263	CER.–CAPACITOR	1 nF		2
C 4–7, 13, 14, 17, 18	220 481	CER.–CAPACITOR	0,1 µF		8
C19,26–30	220 231	CER.–CAPACITOR	2,2 nF		6
C 1	220 162	LYTIC	10 µF	63 V	1
C 15, 16	220 493	LYTIC	47 µF	25 V	2
C 2	220 391	LYTIC	220 µF	25 V	1
R 13	221 600	RESISTOR	100 Ohm	1/4 W	1
R 1	221 632	RESISTOR	160 Ohm	1/4 W	1
R 37, 38, 47, 48	221 624	RESISTOR	220 Ohm	1/4 W	4
R 42, 43, 52, 53	221 029	RESISTOR	1 KOhm	1/4 W	4
R 9–12, 30	221 033	RESISTOR	3,3 KOhm	1/4 W	5
R 41, 51	221 607	RESISTOR	6,8 KOhm	1/4 W	2
R 35, 36, 39, 45, 46, 49, 56	221 035	RESISTOR	10 KOhm	1/4 W	7
R 14–21	221 603	RESISTOR	12 KOhm	1/4 W	8
R 22–29	221 036	RESISTOR	15 KOhm	1/4 W	8
R 5–7, 31, 55	221 604	RESISTOR	22 KOhm	1/4 W	5
R 40, 50	221 618	RESISTOR	24 KOhm	1/4 W	2
R 8	221 048	RESISTOR	100 KOhm	1/4 W	1
R 58	221 685	RESISTOR	3,9 Ohm	1/2 W	1
R 33	221 152	RESISTOR	330 Ohm	1/2 W	1
R 44, 54	221 692	WIRE WOUND RESISTOR	1 Ohm	1 W	2

coinopmanuals.com

SPARE PARTS LIST

POS.	PART–No.	DESCRIPTION	DATA		QTY
	176 249	**CB–STEPPER, ASSY**			1
	231 322	OPTO–COUPLER	LTH–301		1
	225 611	SOCKET	4 prongs	SW	1
	176 557	**CABLE HARNESS – LIFT**			1
	176 004	CB–LIFT ADAPTR, ASSY			1
	176 433	OPTO, LEFT MOUNTING			1
	231 322	OPTO–COUPLER	LTH 301		2
	220 334	MKT–CAPACITOR	0,1 µF / 63 V		1
	176 434	OPTO, RIGHT MOUNTING			1
	231 322	OPTO–COUPLER	LTH 301		2
	220 334	MKT–CAPACITOR	0,1 µF / 63 V		1
	176 556	CB–ENDCONTROL			1
	231 322	OPTO–COUPLER	LTH 301		1
	176 385	CABLE HARNESS: DRIVER – DECODER			1

coinopmanuals.com

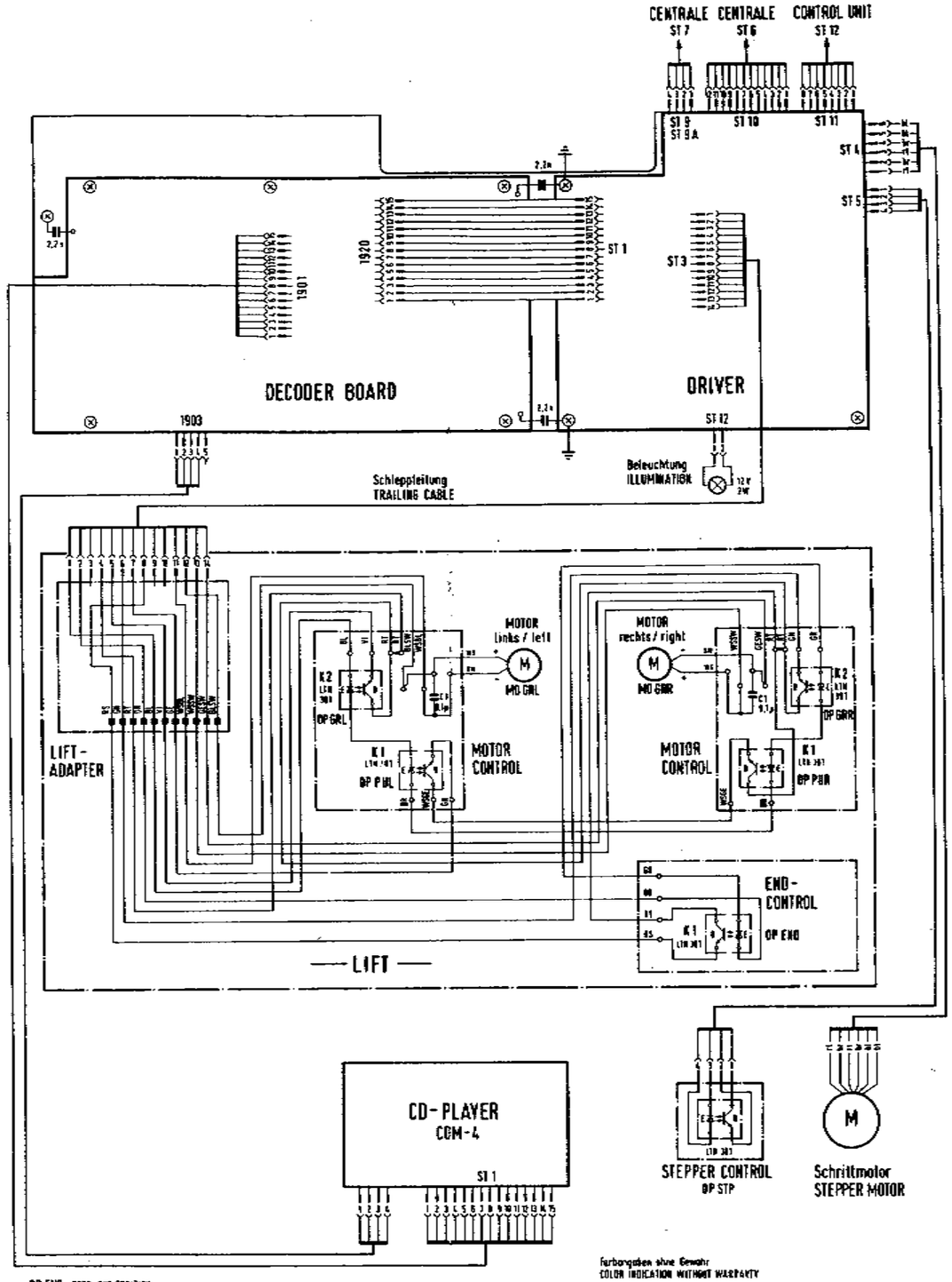

OP END OPTO END POSITION

OP PUL OPTO PICKUP CONTROL LINKS
OPTO PICKUP CONTROL LEFT

OP PUR OPTO PICKUP CONTROL RECHTS
OPTO PICKUP CONTROL RIGHT

OP GRL OPTO GREIFER LINKS
OPTO GRASP LEFT

OP GRR OPTO GREIFER RECHTS
OPTO GRASP RIGHT

OP STP OPTO STEPPER CONTROL

MO GRL MOTOR GREIFER LINKS
MOTOR GRASP LEFT

MO GRR MOTOR GREIFER RECHTS
MOTOR GRASP RIGHT

Farbspiegel
COLOR CODE

ws	weiß	white
bl	blau	blue
br	braun	brown
ge	gelb	yellow
gn	grün	green
gr	grau	grey
or	orange	orange
rs	rosa	pink
rt	rot	red
sw	schwarz	black
vi	violett	violet

Draufsicht
TOP VIEW

LTH 301

Farbangaben ohne Gewähr
COLOR INDICATION WITHOUT WARRANTY

ÄNDERUNGEN IM SINNE DES TECHN. FORTSCHRITTES VORBEHALTEN,
JEDOCH KEINE NACHRÜSTPFLICHT!
SUBJECT TO TECHNICAL MODIFICATION WITHOUT OBLIGATION
TO MODIFY EQUIPMENT ALREADY DELIVERED!

NSM MUSIKAUTOMATEN PHONOGRAPHS **ES V-CD** TECHNOLOGY

ELEKTROPLAN CD-WECHSLER
OPERATING SCHEME CD-CHANGER

Tag 16.09.93 | Gez. Braun | Bearb. | Gepr.

821

176 392 / 176 351 / 176 513 / 176 609
176 393 / 176 352 / 176 514 / 176 610 / 176 598
176 394 / 176 353 / 176 515
07/93

coinopmanuals.com

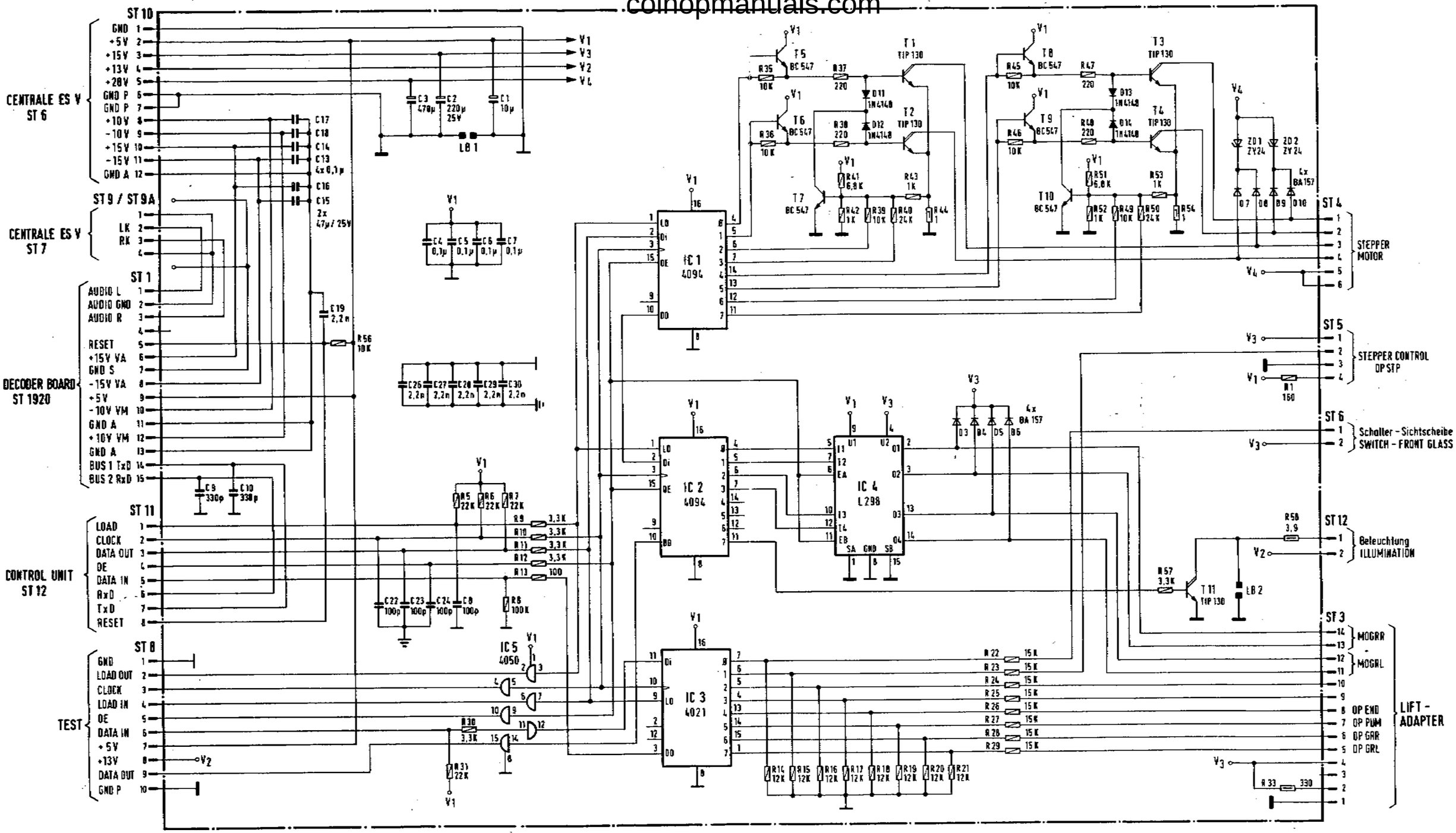

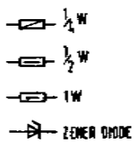

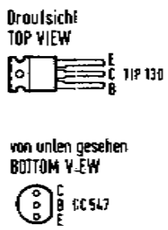

OP END	OPTO END POSITION
OP GRL	OPTO GREIFER LINKS OPTO GRASP LEFT
OP GRR	OPTO GREIFER RECHTS OPTO GRASP RIGHT
OP PUM	OPTO PICK UP MITTE OPTO PICK UP CENTER
OP STP	OPTO STEPPER CONTROL
MO GRL	MOTOR GREIFER LINKS MOTOR GRASP LEFT
MO GRR	MOTOR GREIFER RECHTS MOTOR GRASP RIGHT

ÄNDERUNGEN IM SINNE DES TECHN. FORTSCHRITTES VORBEHALTEN, JEDOCH KEINE NACHRÜSTPFLICHT !
SUBJECT TO TECHNICAL MODIFICATION WITHOUT OBLIGATION TO MODIFY EQUIPMENT ALREADY DELIVERED !

NSM MUSIKAUTOMATEN PHONOGRAPHS **ES V-CD** TECHNOLOGY

Schaltbild
WIRING DIAGRAM

DRIVER

176 392 / 176 351 / 176 513 / 176 609
176 393 / 176 352 / 176 514 / 176 610 / 176 598
176 394 / 176 353 / 176 515

Dat	Gez	Bearb	Gepr
19.03.92	Braun	[illegible]	[illegible]

07/93

coinopmanuals.com

UNIT DESCRIPTION

TITLE INDICATION II

FOR NSM–PHONOGRAPHS

ES V–CD TECHNOLOGY

to
Technical Information, ASSY

176 393	THE PERFORMER GRAND II
176 352	THE WIZARD/ OLD FASHION WIZARD
176 514	THE PERFORMER CLASSIC
176 610	CD HIDE–AWAY II
176 598	FIREBIRD II
176 705	THE PERFORMER WALL

N S M
Aktiengesellschaft
Saarlandstraße 240
55411 Bingen am Rhein

9

Page 901–913

coinopmanuals.com

1 FUNCTION

1.1 PCB Title display

The PCB is connected to the serial interface and +5 V of the control unit via ST 1. +15 V and +14 V are also conducted via ST 1.
The constant voltage of +15 V supplies motors and opto couplers.

Shiftregister IC 2 is the output port for motor driver IC 3, which controls the motor for stacker movement (MO MOV) and the gripper motor (MO GR).

Shiftregister IC 1 is the input port for opto couplers and push buttons.
Light barriers GRL and GRR control the endposition of the gripper (carrier).
MOV1, MOV2 and MOV3 supervise various positions during the stacker movement. Any blocking will be recognized and displayed by error code Er 9x.
Pushbuttons TL and TR in the PCB are service keys for moving title holders.
They are identical with pushbuttons (<—) and (—>) on the front of the phonograph.

1.2 Movement of title holders

By pushing the keys "left" respectively "right" two title holder will be moved into the corresponding direction. A complete movement consists out of following phases: If i.e. the key "left" is pushed, at first the position of the gripper will be checked and –if required– the front gripper positioned in front of the right hand stack. Both stacks are level. Now the right stack moves to the front while the left one moves back simultaneously until the grippers enter the carrier slots of the corresponding title holders. Then the grippers move the title holder to the other side. In the final position the right hand stack will be moved forward while the left hand stack will be moved backward until they are level. The grippers will be brought back to their starting position. In case of a limitation of selectable CD's via service step P042 only the corresponding title holders will be shown. A movement to the right beyond the highest cover number as well as to the left below cover number 1 is not possible.

1.3 Exchange of defective title holders

When defective title holders can still be driven to the front by the motor, the exchange of the holder should be performed there.
For removal, the center of the title holder has to be bent slightly forward until it jumps out of the top guide.
The insertion of the new title holder works accordingly.

coinopmanuals.com

1.4 Jammed or dislocated title holders

When the transportation by motor is impossible due to jamming, all title holders in front of the jamming location have to be removed. After correcting the problem the title holders have to be inserted in the same sequence (Fig. 1).

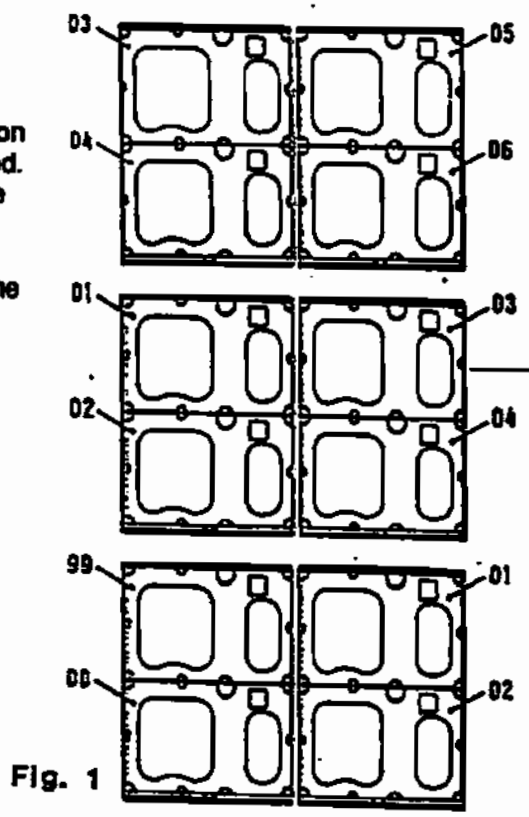

Fig. 1

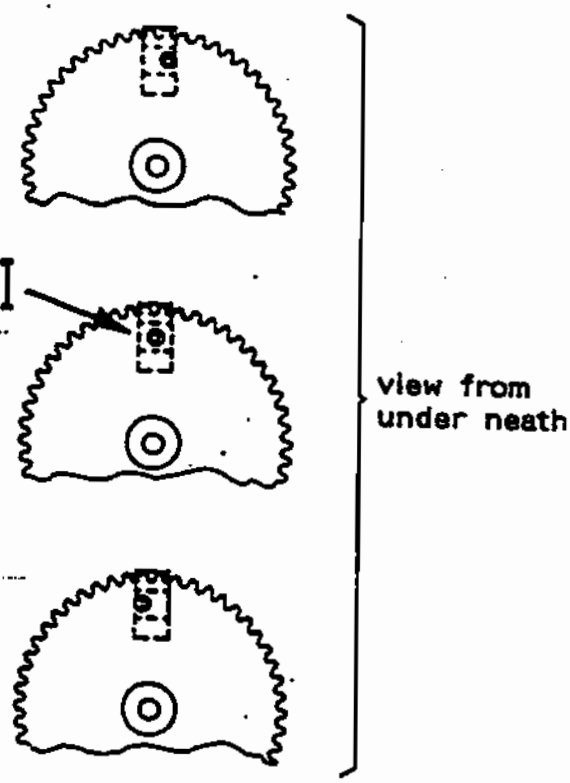

Fig. 2

1.5 Insertion of all title holders (Synchronization)

When all title holders are removed and the motor has turned, the synchronization has to be readjusted.
During insertion of the title holders it is important, that the pin of the counter wheel is positioned exactly in the center of the opto coupler "sync" (Fig. 2/I, 3/I).
The belt drives for the title holders (Fig. 3/II) have to be in their end position. When this is not the case, one of the pushbuttons <— —> or the service button TL/TR has to beused, until position I and the end position are reached.

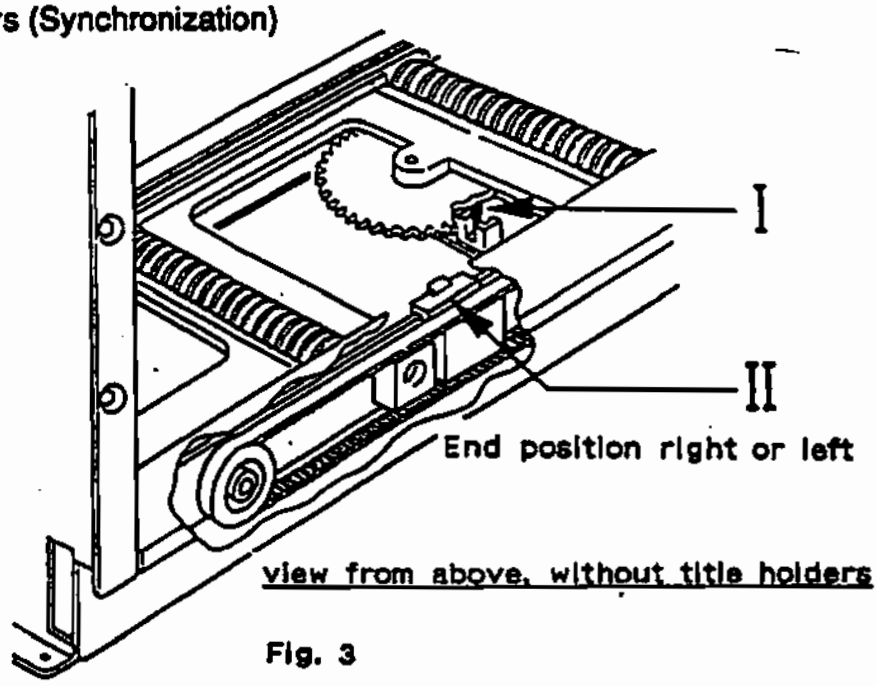

Fig. 3

Now the synchronization has the correct relation to the position of the title holders. The title holders have to be inserted into the worm drives starting from the rear end. In order to do this the title holder has to be bent slightly forward in the center until it fits in the guide.
It should be started at the left rear end with "53" (see Fig. 4) then "55", "57" etc until "01"; on the right side it starts with "51", the "49", "47" until "03".

coinopmanuals.com

Sequence of title holders (for synchronization)

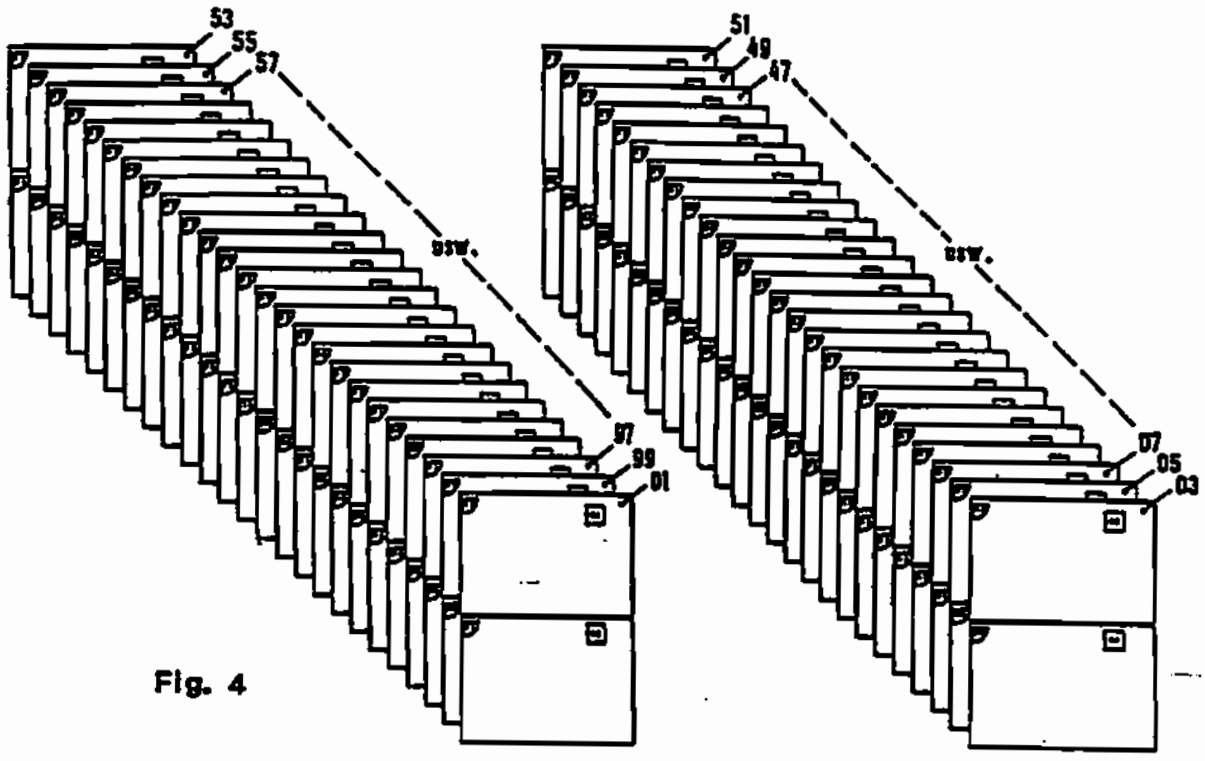

Fig. 4

NOTE! Special care has to be taken during insertion that the first holder has to be inserted into to last slot of the worm drives and the next into the following slot directly in front. If one slot is accidently skipped, all following title holders have to be removed again.

coinopmanuals.com

2 SERVICE

2.1 Operation tests

Service–program–step P156, input test "F7" allows checking of the inputs from the title display. The result is shown on display 3:

- The switching position of any opto couplers is shown on the first digit from the right

  "0" = closed,
  "1" = open

- The opto coupler is shown on the second digit from the right

  Gripper opto — "0" = GRL, "1" = GRR.

  Switching wheel opto — "2" = MOV1, "3" = MOV2, "4" = MOV3.

  Counting wheel opto — "5" = SYNCHRON.

  Directional pushbuttons — "6" = TL, "7" = TR.

- The port number is shown on the third digit from the right.

  "4" = Port 6 on IC 1

coinopmanuals.com

SPARE PARTS LIST

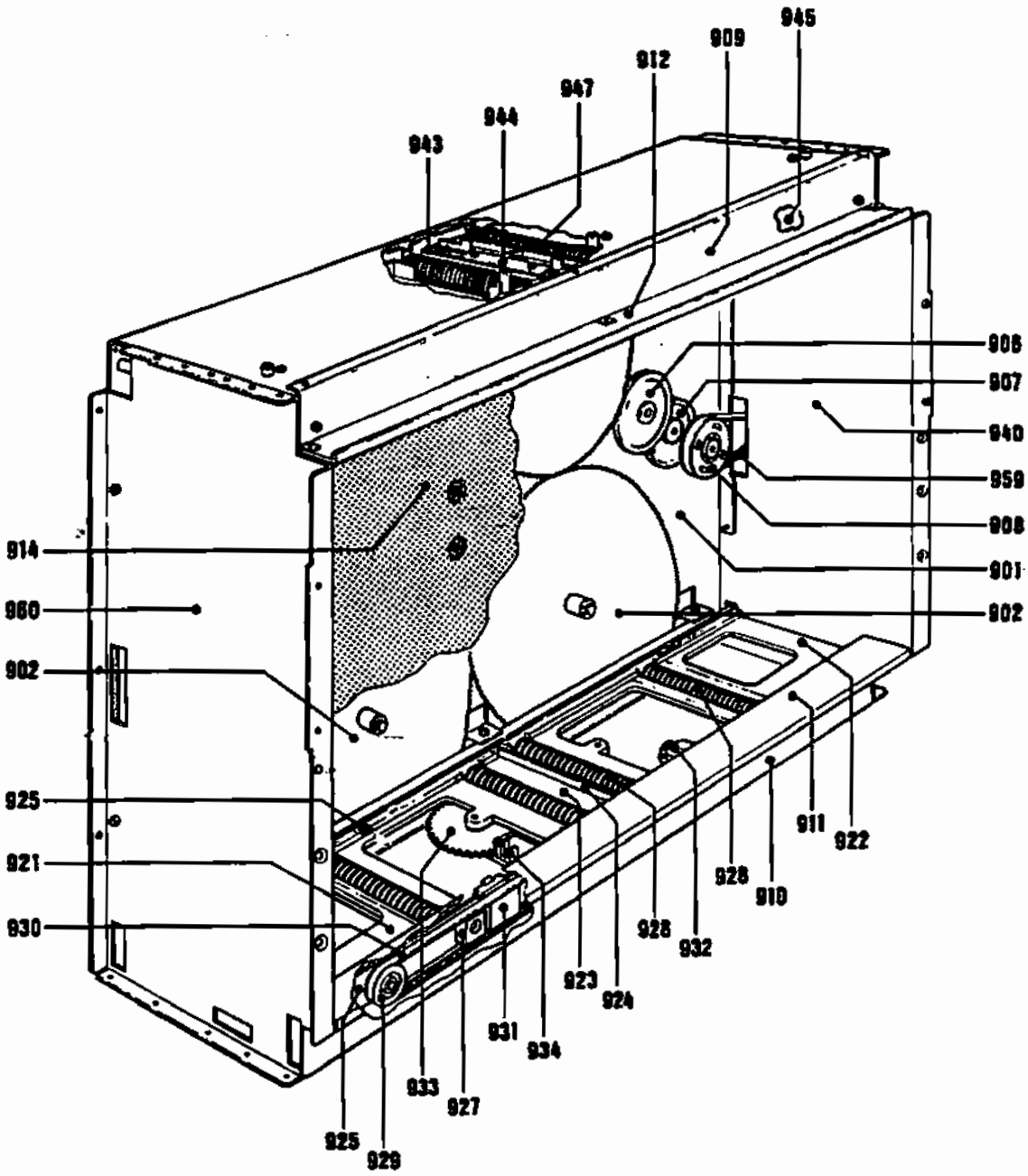

coinopmanuals.com

SPARE PARTS LIST

POS.	PART–No.	DESCRIPTION	DATA	QTY
900	176 730	CD–TITLE INDICATION III. ASSY	(with Title Holder)	1
901	174 917	CABINET PLATE, STAMPED		1
	206 100	PLASTIC BEARING	STAR–NYLINER	4
902	174 753	TOOTHED WHEEL	Z = 160	4
903	174 876	SHIFTING WHEEL		1
904	174 929	CB–SHIFTING WHEEL, ASSY		1
906	174 886	GEAR WHEEL	Z = 58	1
907	174 875	GEAR WHEEL	Z = 48	1
908	174 878	BELT WHEEL	Z = 52	1
	174 879	WASHER		1
909	174 848	COVER, UPPER		1
910	174 847	COVER, LOWER		1
911	174 900	TRIMPLATE, LOWER	white	1
912	175 123	TRIMPLATE, UPPER	blue	>
912	175 124	TRIMPLATE, UPPER	yellow	1
913	176 832	TITLE HOLDER SET III, black		1
	175 533	TRANSPORT DEVISES for TITLE HOLDER		1
	219 185	TITLE STRIP		120
	212 509	STICKER		—
914	175 926	GUIDE PLATE, REAR SIDE		1

coinopmanuals.com

SPARE PARTS LIST

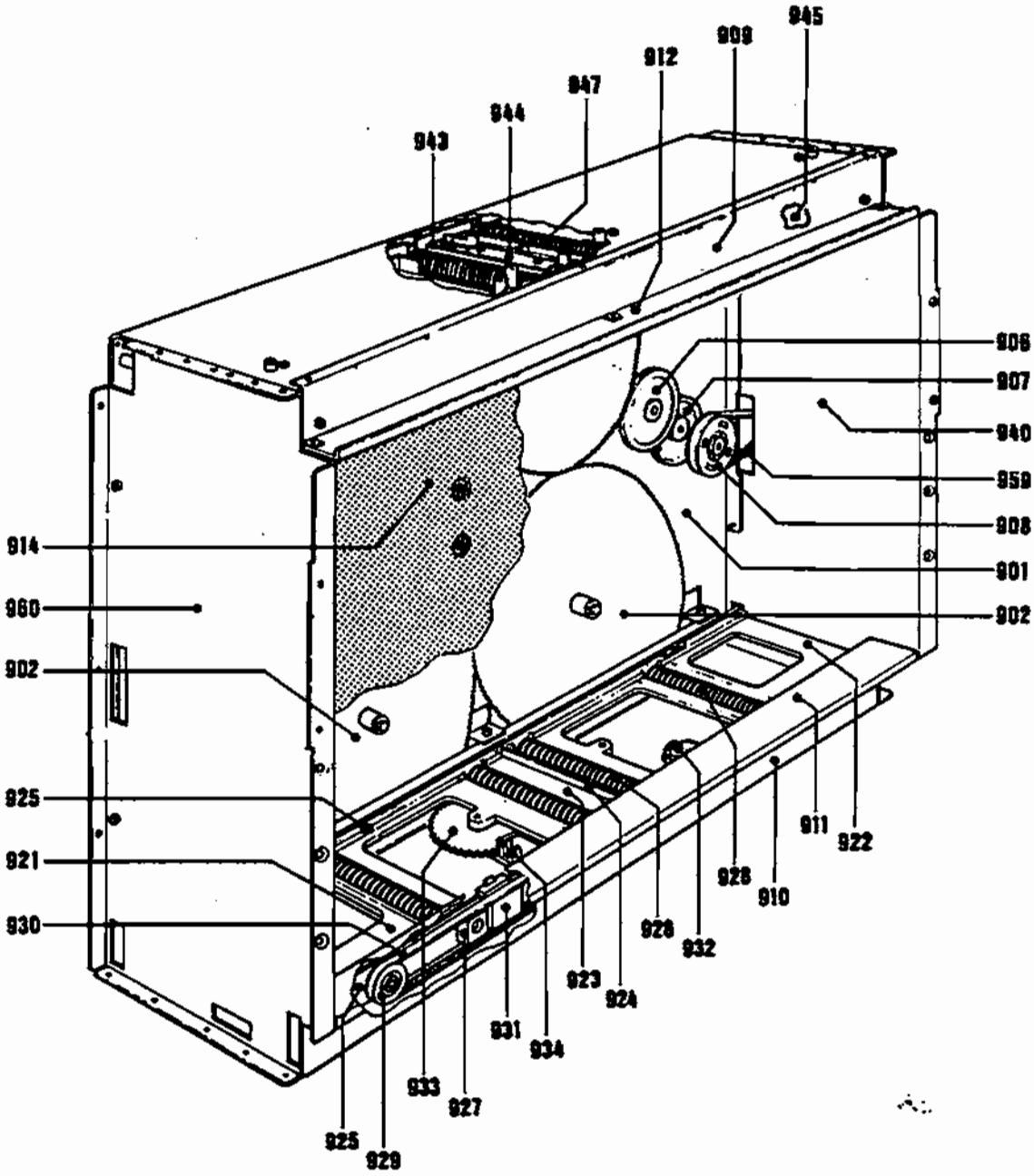

coinopmanuals.com

SPARE PARTS LIST

POS.	PART-No.	DESCRIPTION	DATA		QTY
		LOWER DECK			
921	175 077	TRAVERSE I, ASSY			1
922	175 944	TRAVERSE II			1
923	175 322	TRAVERSE, MIDDLE			1
924	175 321	BRACKET			1
	741 008	BALL ⌀6 DIN 5401			2
	205 834	PRESSURE SPRING			2
925	174 906	HOLDING BAR, MOUNTED			1
946	175 923	HOLDING BAR, REAR SIDE (UPPER)			1
927	206 794	LOSS			2
928	174 751	WORM, ASSY, LOWER			4
	206 100	PLASTIC BEARING	STAR-NYLINER		4
929	174 898	BELT WHEEL	Z = 28		2
930	206 776	BELT	Typ S 2 M 800		2
931	174 846	DRIVE, FRONT SIDE			1
	175 952	DRIVE II, REAR SIDE			1
932	174 930	CB-DRIVER, ASSY	to TRAVERSE I/II	—	2
933	174 885	COUNTER WHEEL			1
934	175 078	CB-CB-COUNTER WHEEL, ASSY			1
	225 412	PIN PLUG ST 1	4 prongs	90°	1
	231 322	COPPLER PLATE SYNC	LTH-301		1
	175 103	CABLE HARNESS: SHIFTING WHEEL			1
	175 104	CABLE HARNESS: DRIVE			1

coinopmanuals.com

SPARE PARTS LIST

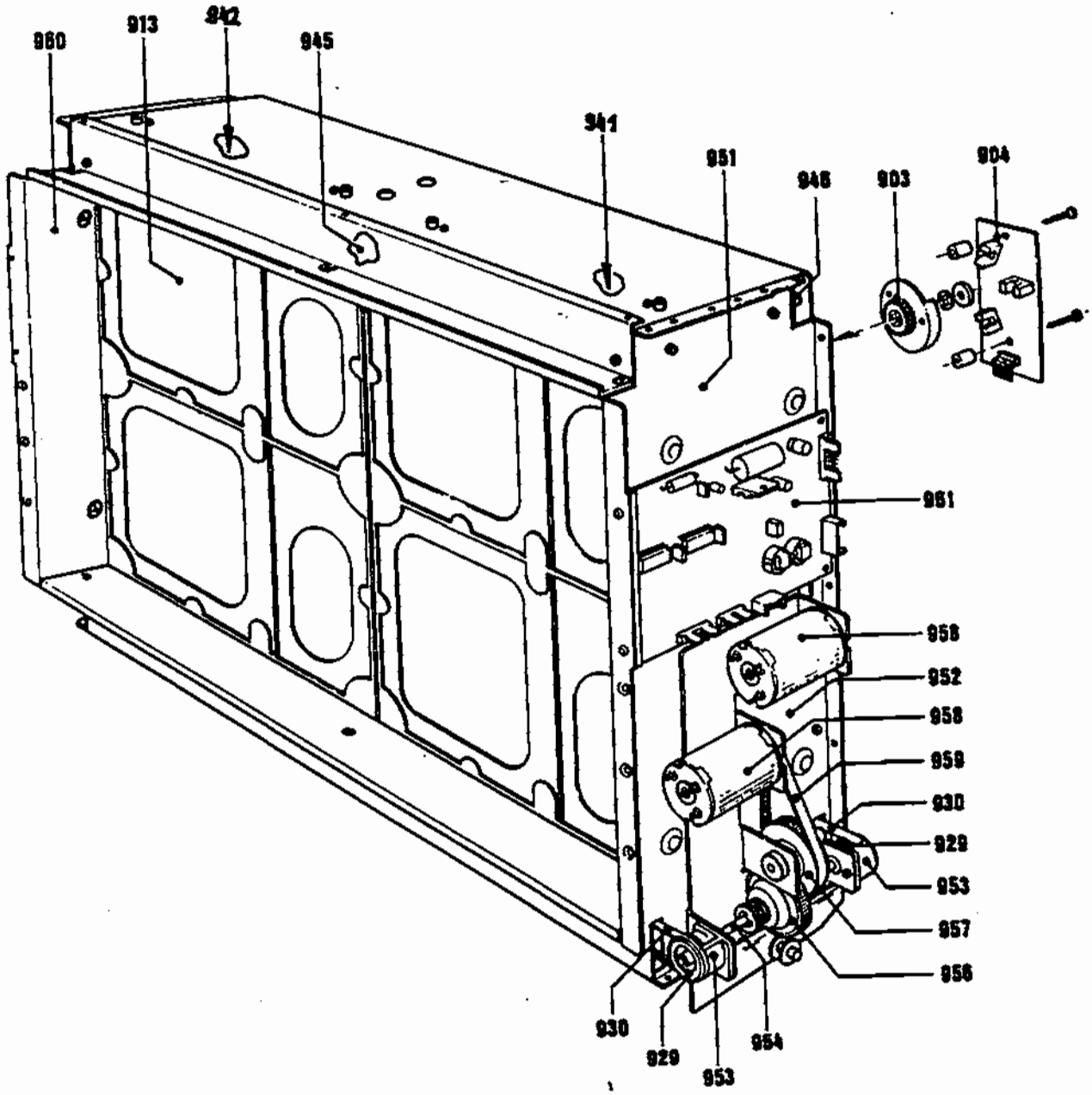

coinopmanuals.com

SPARE PARTS LIST

POS.	PART–No.	DESCRIPTION	DATA	QTY
		UPPER DECK		
941	175 943	TRAVERSE I		1
942	175 944	TRAVERSE II		1
943	175 322	TRAVERSE, MIDDLE		1
944	175 321	BRACKET		1
	741 008	BALL ⌀ 6 DIN 5401		2
	205 834	PRESSURE SRING		2
945	176 564	HOLDING BAR I (UPPER)		1
	206 100	PLASTIC BEARING	STAR–NYLINER	4
946	176 563	HOLDING BAR, REAR SIDE (UPPER)		1
947	174 764	WORM GEAR, ASSY, UPPER		4
		SIDE PARTS		
951	174 932	SIDE PLATE, STAMPED, RIGHT		1
952	174 925	MOTOR– and GEAR PLATE, STAMPED		1
953	174 926	BELT PROTECTION, ASSY		2
957	174 878	BELT WHEEL	Z = 52	1
	174 879	WASHER		1
958	174 889	MOTOR, ASSY		2
	176 943	CABLE HARNESS–MOTOR		1
959	206 789	BELT	40 S 2 M 180	2
960	175 946	SIDE PLATE, LEFT		1
	176 616	DAMPER		8
961	174 928	CB–TITLE INDICATOR, ASSY		1
	171 289	DISTANCE SLEEVE		1

coinopmanuals.com

SPARE PARTS LIST

POS.	PART–No.	DESCRIPTION	DATA		QTY
	174 928	CB–CD TITLE INDICATION II			1
ST 4	225 443	PIN PANEL RM 2,5	6 prongs	red	1
ST 3	225 444	PIN PLUG RM 2,5	8 prongs	red	1
ST 1	225 440	PIN PLUG RM 2,5	10 prongs	red	1
ST 2	225 710	PIN PANEL	4 prongs		1
ST 6	225 711	PIN PANEL	6 prongs		1
TL, TR	222 404	KEY	D 6	red	2
IC 1	221 763	IC–CMOS	HEF 4021 B		1
IC 2	221 771	IC–CMOS	HEF 4094 B		1
IC 3	231 303	IC–LINEAR	L 298		1
D 1–8	221 822	SI–DIODE	BA–157		8
D 9	221 114	SI–DIODE	1 N 4148		1
T 1	221 283	SI–TRANSISTOR	BC 212 B		1
C 1–3, 9	220 334	MKT–CAPACITOR	0,1 µF	63 V	4
C 6	220 332	MKT–CAPACITOR	0,33 µF	63 V	1
C 7	220 162	LYTIC	10 µF	63 V	1
C 4, 8	220 250	LYTIC	100 µF	25 V	2
C 5	220 253	LYTIC	1000 µF	25 V	1
R 33	221 620	RESISTOR	22 Ohm	1/4 W	1
R 31	221 600	RESISTOR	100 Ohm	1/4 W	1
R 25–27	221 033	RESISTOR	3,3 KOhm	1/4 W	3
R 19, 28–30	221 035	RESISTOR	10 KOhm	1/4 W	4
R 11–18	221 603	RESISTOR	12 KOhm	1/4 W	8
R 2–9	221 036	RESISTOR	15 KOhm	1/4 W	8
R 32	221 604	RESISTOR	22 KOhm	1/4 W	1
R 20	221 049	RESISTOR	470 KOhm	1/4 W	1
R 23, 35	221 273	RESISTOR	10 Ohm	1/2 W	2
R 21, 22	221 392	RESISTOR	390 Ohm	1/2 W	2
R 24	221 692	WIRE WOUND RESISTOR	1 Ohm		1
R 36	221 169	WIRE WOUND RESISTOR	10 Ohm		1

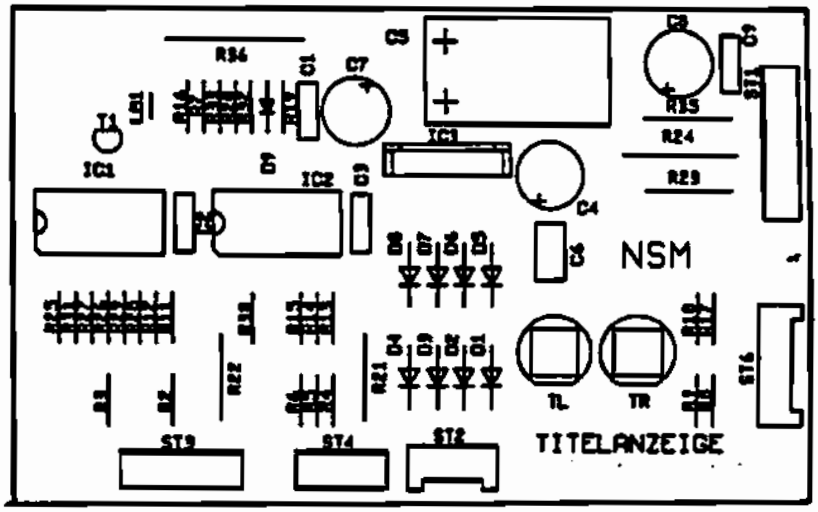

coinopmanuals.com

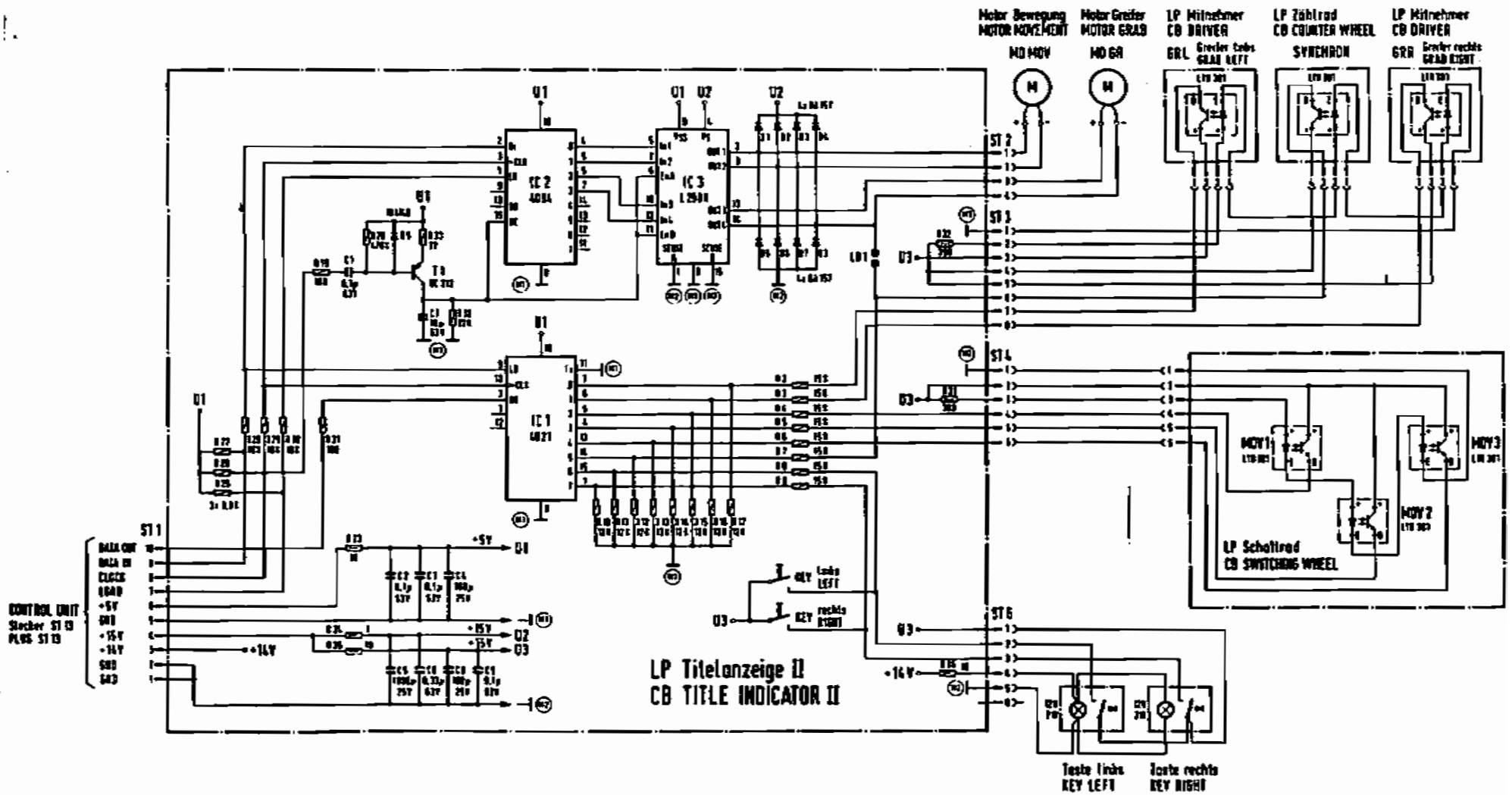

ÄNDERUNGEN IM SINNE DES TECHN. FORTSCHRITTES VORBEHALTEN,
JEDOCH KEINE NACHRÜSTPFLICHT!
SUBJECT TO TECHNICAL MODIFICATION WITHOUT OBLIGATION
TO MODIFY EQUIPMENT ALREADY DELIVERED!

NSM Musikautomaten Produktions ES V-CD Technologie

Schaltbild / WIRING DIAGRAM

Titelanzeige II / TITLE INDICATOR II

coinopmanuals.com

UNIT DESCRIPTION

ELECTR. COIN– AND BILL ACCEPTOR

FOR NSM–PHONOGRAPHS

ES V–CD TECHNOLOGY

to
Technical Information, ASSY

176 393	THE PERFORMER GRAND II
176 352	THE WIZARD/ OLD FASHION WIZARD
176 514	THE PERFORMER CLASSIC
176 610	CD HIDE–AWAY II
176 598	FIREBIRD II
176 705	THE PERFORMER WALL

N S M
Aktiengesellschaft
Saarlandstraße 240
55411 Bingen am Rhein

10

Page 1001–1007

coinopmanuals.com

INDEX

1 MECHANICAL COIN CHUTE

2 BILL VALIDATION – DOLLAR BILL ACCEPTOR

3 MARS ELECTRONIC COIN VALIDATOR
3.1 Monetary Value Settings
3.2 Price Tables
3.3 Other Settings/Information

coinopmanuals.com

1 MECHANICAL COIN CHUTE

See also the circuit in the wiring diagram in the appendix of the "Technical Information".

The coins that come out of the "good" channels of the coin acceptor run through different optic barriers. The optic barriers are in the coin chute under the coin acceptor.

Two photo transistors, T III and T I as well as T IV and T II are illuminated by one IR diode each (LED I and LED II).
As long as a light barrier is not interrupted by a coin, all photo transistors, T I to T IV, are switched to logically "0". So all output lines.
1 = T IV,
2 = T III,
3 = T I,
4 = T II are at logically "0", i.e. their voltage level is 1,0 V.

If a coin passes through an optic beam, the respective photo transistor is darkened for that time. The output becomes log. "1" via the pull–up resistors in the control unit, i.e. their level is 10 V.
Since T 1 is also darkened, when T III is effected by a coin (T 1 is behind T III, both are illuminated by the same light diode), the output from T I over T V is kept at "0". This occurs via resistors R 72, R 70; they bring transistor T V in a satiated state when T III is open.

The same goes for T IV; it is kept at "0" by T VI when a coin falls through T II. The control for T VI occurs via R 73, R 69.

The addition button is switched in sequence to T IV so that Line 1 becomes log. "1" at service credit.

R 67 limits the current of the luminous diodes LED I and LED II.

The output signals of the four photo transistors are evaluated in the control unit whereby line.
1 = P 074,
2 = P 073,
3 = P 072,
4 = P 071 is assigned to the monetary value setting in the service program and is to be programmed according to the coin value; see also chapter 3 Programming of NSM–phonographs".

2 BILL VALIDATION – DOLLAR BILL ACCEPTOR

See also the circuit in the wiring diagram in the appendix of the "Technical Information".

The bill validator, after the bill has passed through and been accepted, sends as many pulses to the control unit as correspond to the value of the bill.
The output of the bill validator is connected to the control unit via ST 9, Pins 1 and 2. 1 pulse is sent to the control unit with 1 dollar and 5 pulses with 5 dollars.

The input of the bill validator is assigned to program step P075 and is to be programmed accordingly; see also chapter 3 "Programming of NSM–phonographs".

coinopmanuals.com

3 MARS ELECTRONIC COIN VALIDATOR

4 or 5 different coins be checked depending on the type. The three sensors in the validator register each separately the width, material composition and pressure of each deposited coin. If a deposited coin passes the sensors, the prepard data are passed on to a register and compared with the contents of a memory (PROM). If validation criteria are identical are identical with a data set of the PROM, an internal "valid" signal is produced. Depending on the coin value it goes as output signal A1 to A5 to the plug of the PCB adapter (depending on type of validator, 15 or 13 poled). From there the signal goes via the 6–pole plug to control unit CD for processing.

3.1 Monetary Value Settings

The information in the "Operating Instructions" and the statistics and service program about monetary value settings refer to coin mechanisms with mechanial coin acceptors.

If a electronic validator has been installed, the monetary value settings in the individual program steps are assigned to corresponding output signals: P071 to signal A1 or A5, P072 to A3, P073 to A4, P074 to A2.

Notive: When inserting a coin during program steps P070–P075, the program step assigned to the coin is automatically displayed in Display 1.
The monetary values are programmed in monetary value units: "0100" ≙ 1 $, "0025" ≙ 25 c, "0050" ≙ 50 c.
Not used channels are programmed with "0000".

3.2 Price Tables

Set the number of credit per monetary value in program steps P061 to P065 as described in the "Statistics" and Service Program, 1.3.2 Price Tables".

3.3 Other Settings/Information

When exchanging the control unit the programming has to be done in the new unit also.

Attention! Then push button "Service credits" is wired parallel to the signal line of channel 4 (signal A2, program step P074). When the cabinet switch is pulled out one service credit is given with each pressing of the push button "service credit". But no cash registration.
For checking the monetary value setting of channel 4 (signal A2) the cabinet switch has to be pushed in.

Notice: Non–used channels can be blocked. For this purpose the bridge of the corresponding channel (A1–A5 on the PCB) has to be disconnected or conductor A5 is not connected.

coinopmanuals.com

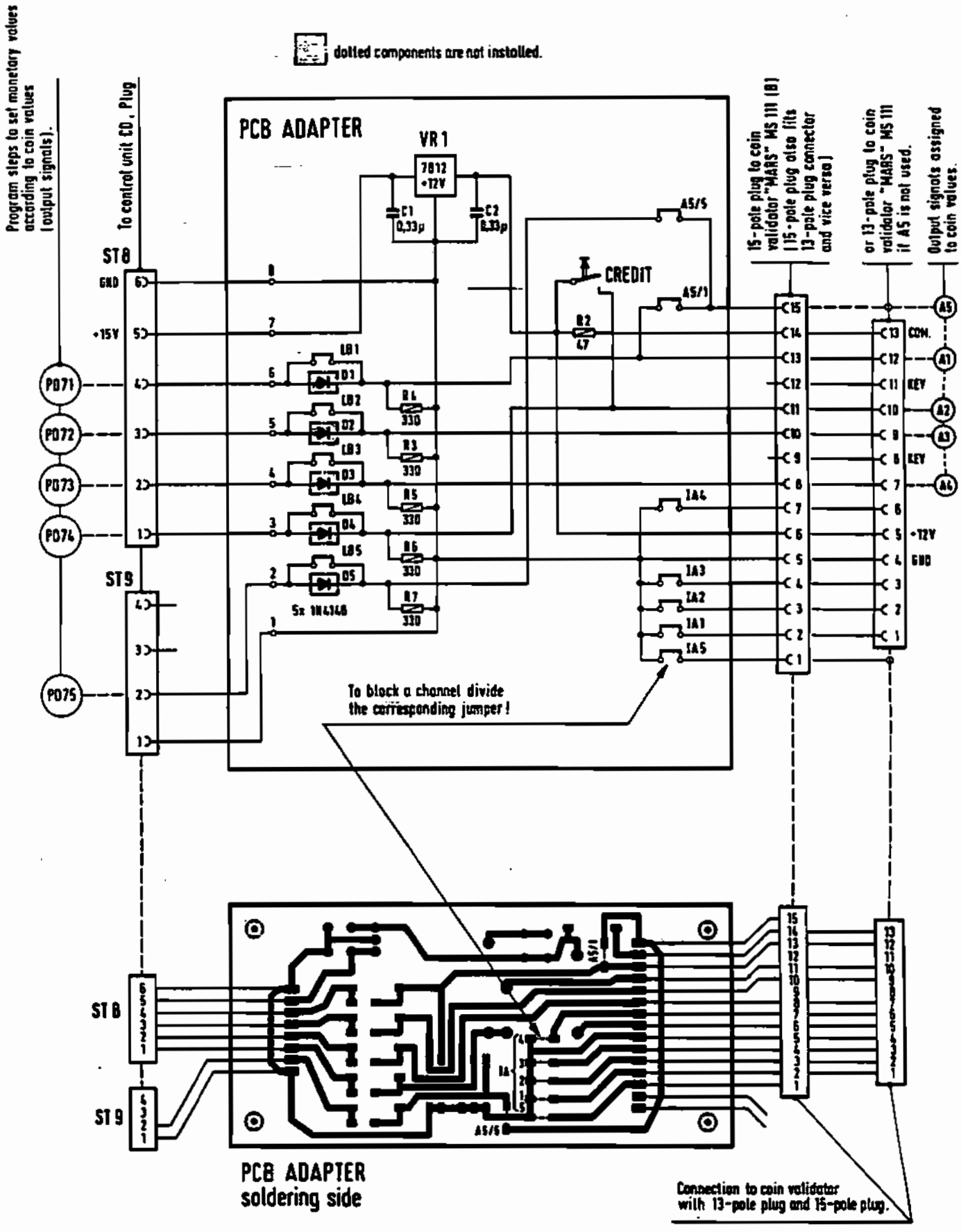

coinopmanuals.com

Monetary Value Settings

Programming of monetary values and values settings according to the individual coins (see 3.1.).

CURRENCY	Monetary Values = Coin Value					Diesen.	
	P071 (A1/A5)	P072 (A2)	P073 (A4)	P074 (A3)	P075 (A6)	Jumper	Coin Validator – Type
Germany	500 = 5,– DM	100 = 1,– DM	0	200 = 2,– DM	0	A5/5, IA4/IA5	GDE56 L00K/B1 / GDE56L00C/B1
Switzerland	500 = 5 Fr	100 = 1 Fr	0 (1/2 Fr)	200 = 2 Fr	0	A5/5, IA4/IA5	GCH 31 L00C / B1
Italy	500 = 500 L 500 = 500 L	100 = 100 L 0 (100 L)	0 (50 L) 0 (50 L)	200 = 200 L 200 = 200 L	0 0	A5/5, IA4/IA5 A5/5, IA3/IA4	GIT 28 L00C / B1 GIT 08 L00C
Belgium	5000 = 50 bfr 50 = 50 bfr 1 bfr (new)	500 = 5 bfr (new) 5 = 5 bfr (new)	0 (1 bfr) 0 (1 bfr (old))	2000 = 20 bfr 20 = 20 bfr	0 0	A5/5, IA3/IA4 (A3/A4) A5/5, IA4/IA5	GBE 19 L00 C / B1 GBE 25 L00C / B1 GBE 19 L00C / B1
Netherland	25 = 25 c	250 = 2 1/2 hfl	500 = 5 hfl ——	100 = 1 hfl	0	A5/5	GNL 37 L00C/B1 / GNL57 L00C/02
France	1000 = 10 F 1000 = 10 F old/new 1000 = 10 F (new) 1000 = 10 FF	200 = 2 F 200 = 2 F 200 = 2 F 200 = 2 FF	100 = 1 F 100 = 1 F 100 = 1 F 100 = 1 FF	500 = 5 F 500 = 5 F 500 = 5 F 500 = 5 FF	0 0 0 2000 = 20 FF	A5/5 A5/5 A5/5 A5/1	GFR 19 L00C GFR 98 L00C / B1 *F GFR 87 L00C 02 GFR 2W L00C / B1 GFR 88 L00C / 02
Denmark	100 = 10 dkr 100 = 10 dkr (new) 2000 = 20 KR (new) 2000 = 20 dkr	10 = 1 dkr 50 = 5 dkr 500 = 5 Kr (new) 500 = 5 dkr	0 (0,25 dkr) 10 = 1 dkr 100 = 1 Kr (old/new) 200 = 2 dkr	50 = 5 dkr 100 = 10 dkr (old) 1000 = 10 Kr (new) 1000 = 10 dkr	0 0 0 100 = 1 dkr	A5/5, IA4 A5/5 A5/1 A5/1	bei 4–Kanal GDK 02 L00C bei 4–Kanal GDK 1A L00C GDK 37 L00C / 02 *E GDK 1K L00C 02
Austria	2000 = 20 S	500 = 5 S	100 = 1 S	1000 = 10 S	0	A5/IA5	GAU 03 L00C
Spain	200 = 200 Pst 500 = 500 P 500 = 500 P	50 = 50 Pst 100 = 100 P 100 = 100 P	25 = 25 Pst 25 = 25 P 25 = 25 P	100 = 100 Pst 200 = 200 P 200 = 200 P	200 = 200 Pst 50 = 50 P 50 = 50 P	A5/1 IA5 A5/1 A5/1 IA1	GESA5 L00CE/02 GESA5 L00E/02 GESA5 L00C/02
Greece	(0) MP closed	50 = 50 Dr	20 = 20 Dr	0	0	A5/5	GGR 1C L00C
Norway	1000 = 10 Kr	100 = 1 Kr	0 (1/2 Kr) ——	500 = 5 Kr	0	A5/5, IA4	GN 008 L00C
Finland	0	500 = 5 MK	100 = 1 MK	0	0	A5/5	GSF 1A L00C
Sweden	500 = 5 Kr	100 = 1 Kr	0 (50 öre)	100 = 1 Kr	0	A5/5, IA4	GSW 09 L00C
Great Britain	100 = 1 £ 100 = 1 £ 100 = 1 £	20 = 20p 20 = 20p 20 = 20p	10 = 10p 10 = 10p (new/old) 10 = 10p (new)	50 = 50p 50 = 50p 50 = 50p	0 0 0	IA5 A5/1 IA5 A5/1 IA5	GDB 31 L00C/GDB81 L00C/B1 GDB08 L00C/02 GDB1/L00C/B1 / GDB1 JL00C *GB
USA	100 = 1 $ 10 = (10c)	25 = 25 c 50 = (50c)	0 25 = 25c	50 = 50 c 100 = (1 $)	0 0	A5/5, IA4 IA5	GUS 20 L00C GUS 1B L00C / B1
Canada	10 = 10 c	100 = 1 $	25 = 25 c	0	0	A5/5	GCN 1A L00C
Australia	0 200 = 2 $	100 = 1 $ 0 = (50c)	20 = 20c 20 = 20c	200 = 2 $ 100 = 1 $	0 0	A5/5 A5/5, IA3	GAS 3X L00C B1/ GAS 1A L00C GAS 28 L00C
Neth.Antillen	0	0	100 = 1 NAF	0	0	A5/1 IA5	GNA 1 A L00C / B1 GNS 1 A L00C / 02
New Zealand	50 = 50 c 200 = 2 $	10 = 10 c 50 = 50 c	5 = 5 c 20 = 20 C	20 = 20 100 = 1 $	0 0	A5/5 IA4/IA5 A5/1	GNZ 03 L00C GAS 41 L00C / 02 AS / NZ
Korea	0	100 = 10 NTS	50 = 5 NTS	0	0	A5/5	GTW 1A L00C
Mexico	0	0	1000 = 1000 P	0	0	A5/5	GME 1A L00C
Hong Kong	500 = 5 $	100 = 1 $	0	200 = 2 $	0	A5/5	GHK 1A L00C/B1
Hungaria	200 = 20 F	50 = 5 F	0	100 = 10 F	0	A5/5, IA4/IA5	GHU 1B L00C / B1
Thailand	0	0	500 = 5 Baht	0	0	A5/5	GTH 1A L00C / 02
South Africa	200 = 2 R (new)	100 = 1 R (old)	50 = 50 C (old/new)	100 = 1 R (new)	0	A5/1	GZA 1B L00C / B1 *E
Israel	500 = 5 Shekel	50 = 1/2 Shekel	10 = 0,1 Shekel	100 = 1 Shekel	0	A5/5, IA3/IA4	GIS 1S L00C /02
Japan	500 = 500 Jen	0	0	100 = 100 Jen	0	A5/1	GJA 1A L00C / 02
Taiwan	0	1000 = 10 NT	500 = 5 NT	0	0	A5/1	GTW 1A L00C / B1
Tschechei	2000 = 20 Kr	500 = 5 Kr	200 = 2 Kr	1000 = 10 Kr	100 = 1 Kr	A5/1	GCZ 1P L00C / B1

*F A5 and IA 5 closed

*E Connection necessary between wire 8 (signal A4) and wire 15 (signal (A5) on "CB–adapter" (see also figure "layout of CB–adapter")

* GB see next page

coinopmanuals.com

*** GB: Selection of coin acception**

The coin validator is provided with a group of jumpers. These are used to select the coin acception of several coins (old/new).

To select a version:

- unscrew the Phillips screw "A" (see figure),
- open the cabinet.
- Set jumper corresponding to the following table:

Coin acception of	Jumper C	E
10 p new	open	open
10 p old	closed	closed
10 p new + old	open	closed

- Close the cabinet of the coin validator after selection.

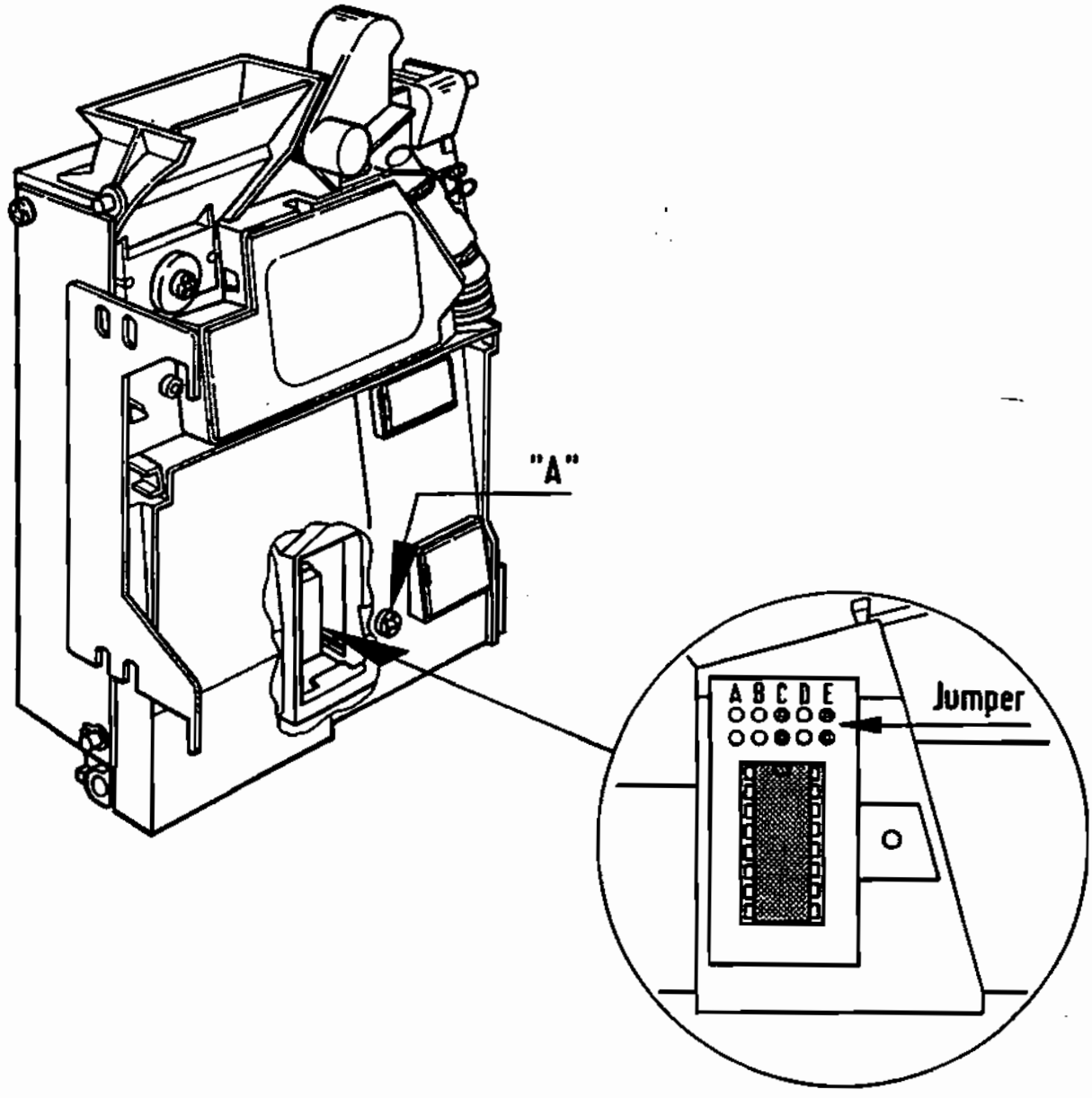

coinopmanuals.com

UNIT DESCRIPTION

REMOTE CONTROL

FOR NSM–PHONOGRAPHS

ES V–CD TECHNOLOGY

to
Technical Information, ASSY

176 393	THE PERFORMER GRAND II
176 352	THE WIZARD/ OLD FASHION WIZARD
176 514	THE PERFORMER CLASSIC
176 610	CD HIDE–AWAY II
176 598	FIREBIRD II
176 705	THE PERFORMER WALL

N S M
Aktiengesellschaft
Saarlandstraße 240
55411 Bingen am Rhein

11

Page 1101–1105

coinopmanuals.com

INDEX

1 FUNCTION
1.1 Infra–red remote control (wireless)
1.2 Wired remote control
1.3 Installation instructions for infra–red remote control
1.4 Volume control (on rear cabinet wall)

coinopmanuals.com

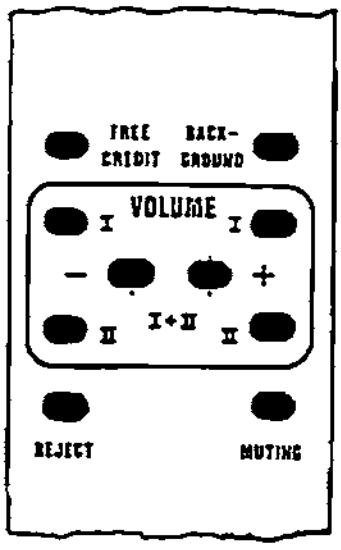

INFRARED REMOTE CONTROL, ASSY.

with 1,5 m Cable	171 808
with 5,0 m Cable	174 258
sender	206 783
Receiver with Cover	173 178

REMOTE CONTROL with 5 m cable

Part No.	**171 743**

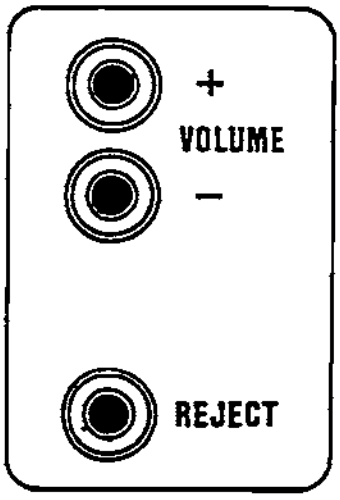

VOLUME CONTROL

Part–No. **170 212**

Option: This volume control is a remote alternative to the control installed in the device. (For connections see par. 1.4) The cable has to be extended – any 4 pole cable can be used.

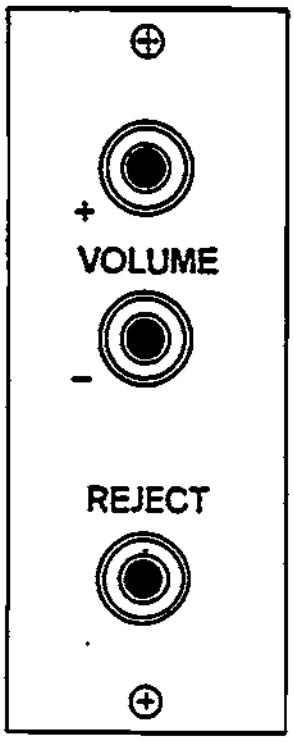

to 1.4

coinopmanuals.com

1 FUNCTION

1.1 Infrared remote control (wireless)

The cable of the remote control receiver has to be put into plug ST 11 of the central unit.
Pin 1 supplies the +15 V voltage.
Pin 2 = GND
The commands – as per chart – are fed to the computer inputs via Pins 3 through 6 by switching to ground.
The signals go to the control unit via plug ST 10.

1.2 Wired remote control

For remote controls with cable the plug has to be connected with ST 11 on the central unit (instead of infrared remote control). The corresponding channels (Pins 3 through 6) – as per chart – are connected to GND Pin 2 via the remote control diode linkage.

TASTE / KEY	AUSGANGS-CODE OUTPUT-CODE	STECKER / PLUG ST 11 / PIN
VOLUME – I	2 / 4	5 / 3
VOLUME + I	4	3
VOLUME – II	2 / 3	5 / 4
VOLUME + II	3	4
FREE CREDIT	1 / 3	6 / 4
BACKGROUND	1 / 4	6 / 3
REJECT	2	5
MUTING	1	6
VOLUME + (I+II)	3 / 4	4 / 3
VOLUME – (I+II)	2 / 3 / 4	5 / 4 / 3

coinopmanuals.com

1.3 Installation Instructions for Infrared Remote Control

The receiver with standard connection cable is mounted onto the back of the cabinet or the back of the hood when a small distance is involved. The top (receiving side) of the receiver should be mounted a little underneath the upper edge of the rear cabinet. Wallboxes and Hide–Away's have to be mounted close to the machine.
If a greater distance has to be bridged or an absorbing celling is influencing correct functioning the receiver has to be mounted in such a way on the wall or the celling that direct radiating of the manual sender is possible. A connection cable (5 m), is available for this purpose.
The connection cable of the receiver is put into plug ST 11 of the central unit.

SECURING MANUAL SENDER
To protect the manual sender from theft, mount the bracket with two screws onto the back of the sender (see fig.). This way the sender can be secured with a chain.

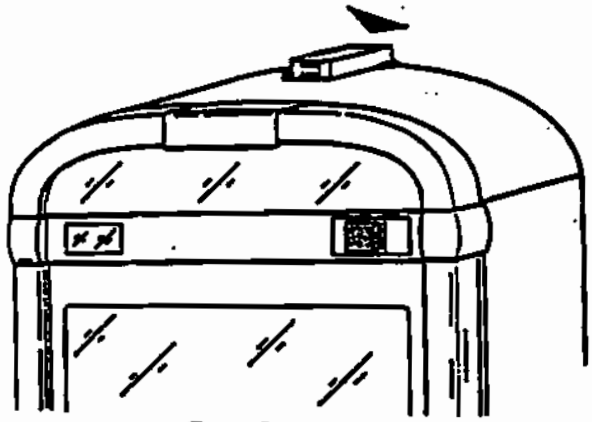

Fig. 1

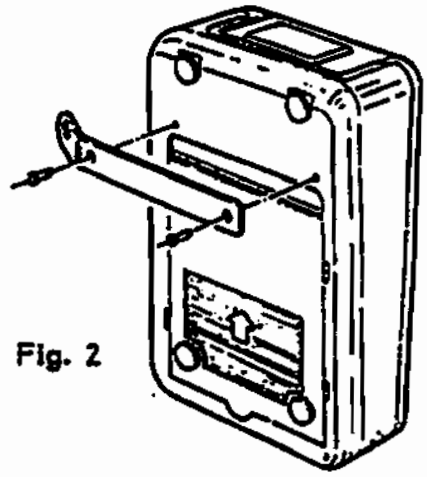

Fig. 2

Manual sender with safety bracket and screws

1.4 Volume Control (On Rear Cabinet Wall does not apply to wallboxes and Hide–Away's).

The connection cable must be put into plug ST 12 of the central unit. When the volume keys are pressed, the computer inputs are switched to GND via the diode linkage D 37–41.

TASTE / KEY	AUSGANGS–CODE OUTPUT–CODE	STECKER / PLUG ST 10 / PIN
VOLUME + (I+II)	3 / 4	4 / 5
VOLUME –(I+II)	2 / 3 / 4	4 / 5 / 6
REJECT	2	7

coinopmanuals.com

Monetary Value Settings
Programming of monetary values and values settings according to the individual coins (see 3.1.).

CURRENCY	Monetary Values = Coin Value					Diecon.	
	P071 (A1/A5)	P072 (A2)	P073 (A4)	P074 (A3)	P075 (A6)	Jumper	Coin Validator – Type
Germany	500 = 5,– DM	100 = 1,– DM	0	200 = 2,– DM	0	A5/5, IA4/IA5	GDE58 L00K/B1 / GDE55L00C/B1
Switzerland	500 = 5 Fr	100 = 1 Fr	0 (1/2 Fr)	200 = 2 Fr	0	A5/5, IA4/IA5	GCH 31 L00C / B1
Italy	500 = 500 L 500 = 500 L	100 = 100 L 0 (100 L)	0 (50 L) 0 (50 L)	200 = 200 L 200 = 200 L	0 0	A5/5, IA4/IA5 A5/5, IA3/IA4	GIT 26 L00C / B1 GIT 06 L00C
Belgium	5000 = 50 bfr 50 = 50 bfr 1 bfr (new)	500 = 5 bfr (new) 5 = 5 bfr (new)	0 (1 bfr) 0 (1 bfr (old))	2000 = 20 bfr 20 = 20 bfr	0 0	A5/5, IA3/IA4 (A3/A4) A5/5, IA4/IA5	GBE 19 L00 C / B1 GBE 25 L00C / B1 GBE 19 L00C / B1
Netherland	25 = 25 c	250 = 2 1/2 hfl	500 = 5 hfl	100 = 1 hfl	0	A5/5	GNL 37 L00C/B1 / GNL57 L00C/02
France	1000 = 10 F 1000 = 10 F old/new 1000 = 10 F (new) 1000 = 10 FF	200 = 2 F 200 = 2 F 200 = 2 F 200 = 2 FF	100 = 1 F 100 = 1 F 100 = 1 F 100 = 1 FF	500 = 5 F 500 = 5 F 500 = 5 F 500 = 5 FF	0 0 0 2000 = 20 FF	A5/5 A5/5 A5/5 A5/1	GFR 19 L00C GFR 96 L00C / B1 *F GFR 87 L00C 02 GFR 2W L00C / B1 GFR E6 L00C / 02
Denmark	100 = 10 dkr 100 = 10 dkr (new) 2000 = 20 KR (new) 2000 = 20 dkr	10 = 1 dkr 50 = 5 dkr 500 = 5 Kr (new) 500 = 5 dkr	0 (0,25 dkr) 10 = 1 dkr 100 = 1 Kr (old/new) 200 = 2 dkr	50 = 5 dkr 100 = 10 dkr (old) 1000 = 10 Kr (new) 1000 = 10 dkr	0 0 0 100 = 1 dkr	A5/5, IA4 A5/5 A5/1 A5/1	bei 4-Kanal GDK 02 L00C bei 4-Kanal GDK 1A L00C GDK 37 L00C / 02 *E GDK 1K L00C 02
Austria	2000 = 20 S	500 = 5 S	100 = 1 S	1000 = 10 S	0	A5/IA5	GAU 03 L00C
Spain	200 = 200 Pst 500 = 500 P 500 = 500 P	50 = 50 Pst 100 = 100 P 100 = 100 P	25 = 25 Pst 25 = 25 P 25 = 25 P	100 = 100 Pst 200 = 200 P 200 = 200 P	200 = 200 Pst 50 = 50 P 50 = 50 P	A5/1 IA5 A5/1 A5/1 IA1	GESA5 L00CE/02 GESA5 L00B/02 GESA5 L00C/02
Greece	(0) MP closed	50 = 50 Dr	20 = 20 Dr	0	0	A5/5	GGR 1C L00C
Norway	1000 = 10 Kr	100 = 1 Kr	0 (1/2 Kr)	500 = 5 Kr	0	A5/5, IA4	GN 008 L00C
Finland	0	500 = 5 MK	100 = 1 MK	0	0	A5/5	GSF 1A L00C
Sweden	500 = 5 Kr	100 = 1 Kr	0 (50 öre)	100 = 1 Kr	0	A5/5, IA4	GSW 09 L00C
Great Britain	100 = 1 £ 100 = 1 £ 100 = 1 £	20 = 20p 20 = 20p 20 = 20p	10 = 10p 10 = 10p (new/old) 10 = 10p (new)	50 = 50p 50 = 50p 50 = 50p	0 0 0	IA5 A5/1 IA5 A5/1 IA5	GDB 31 L00C/GGB81 L00C/B1 GGBG3 L00C/02 GGB1/L00C/B1 / GGB1 JL00C *GB
USA	100 = 1 $ 10 = (10c)	25 = 25 c 50 = (50c)	0 25 = 25c	50 = 50 c 100 = (1 $)	0 0	A5/5, IA4 IA5	GUS 20 L00C GUS 1B L00C / B1
Canada	10 = 10 c	100 = 1 $	25 = 25 c	0	0	A5/5	GCN 1A L00C
Australia	0 200 = 2 $	100 = 1 $ 0 = (50c)	20 = 20c 20 = 20c	200 = 2 $ 100 = 1 $	0 0	A5/5 A5/5, IA3	GAS XX L00C B1/ GAS 1A L00C GAS 2B L00C
Neth.Antillen	0	0	100 = 1 NAF	0	0	A5/1 IA5	GNA 1 A L00G / B1 GNS 1 A L00C / 02
New Zealand	50 = 50 c 200 = 2 $	10 = 10 c 50 = 50 c	5 = 5 c 20 = 20 C	20 = 20 100 = 1 $	0 0	A5/5 IA4/IA5 A5/1	GNZ 03 L00C GAS 41 L00C / 02 AS / NZ
Korea	0	100 = 10 NTS	50 = 5 NTS	0	0	A5/5	GTW 1A L00C
Mexico	0	0	1000 = 1000 P	0	0	A5/5	GME 1A L00C
Hong Kong	500 = 5 $	100 = 1 $	0	200 = 2 $	0	A5/5	GHK 1A L00C/B1
Hungarn	200 = 20 F	50 = 5 F	0	100 = 10 F	0	A5/5, IA4/IA5	GHU 1B L00C / B1
Thailand	0	0	500 = 5 Baht	0	0	A5/5	GTH 1A L00C / 02
South Africa	200 = 2 R (new)	100 = 1 R (old)	50 = 50 C (old/new)	100 = 1 R (new)	0	A5/1	GZA 1B L00C / B1 *E
Israel	500 = 5 Shekel	50 = 1/2 Shekel	10 = 0,1 Shekel	100 = 1 Shekel	0	A5/5, IA3/IA4	GIS 13 L00C /02
Japan	500 = 500 Jen	0	0	100 = 100 Jen	0	A5/1	GJA 1A L00C / 02
Taiwan	0	1000 = 10 NT	500 = 5 NT	0	0	A5/1	GTW 1A L00C / B1
Tschechei	2000 = 20 Kr	500 = 5 Kr	200 = 2 Kr	1000 = 10 Kr	100 = 1 Kr	A5/1	GCZ 1P L00C / B1

*F A5 and IA 5 closed

*E Connection necessary between wire 8 (signal A4) and wire 15 (signal (A5) on "CB–adapter" (see also figure "layout of CB–adapter")

* GB see next page

coinopmanuals.com

*** GB: Selection of coin acception**

The coin validator is provided with a group of jumpers. These are used to select the coin acception of several coins (old/new).

To select a version:

- unscrew the Phillips screw "A" (see figure),
- open the cabinet.
- Set jumper corresponding to the following table:

Coin acception of	Jumper C	Jumper E
10 p new	open	open
10 p old	closed	closed
10 p new + old	open	closed

- Close the cabinet of the coin validator after selection.

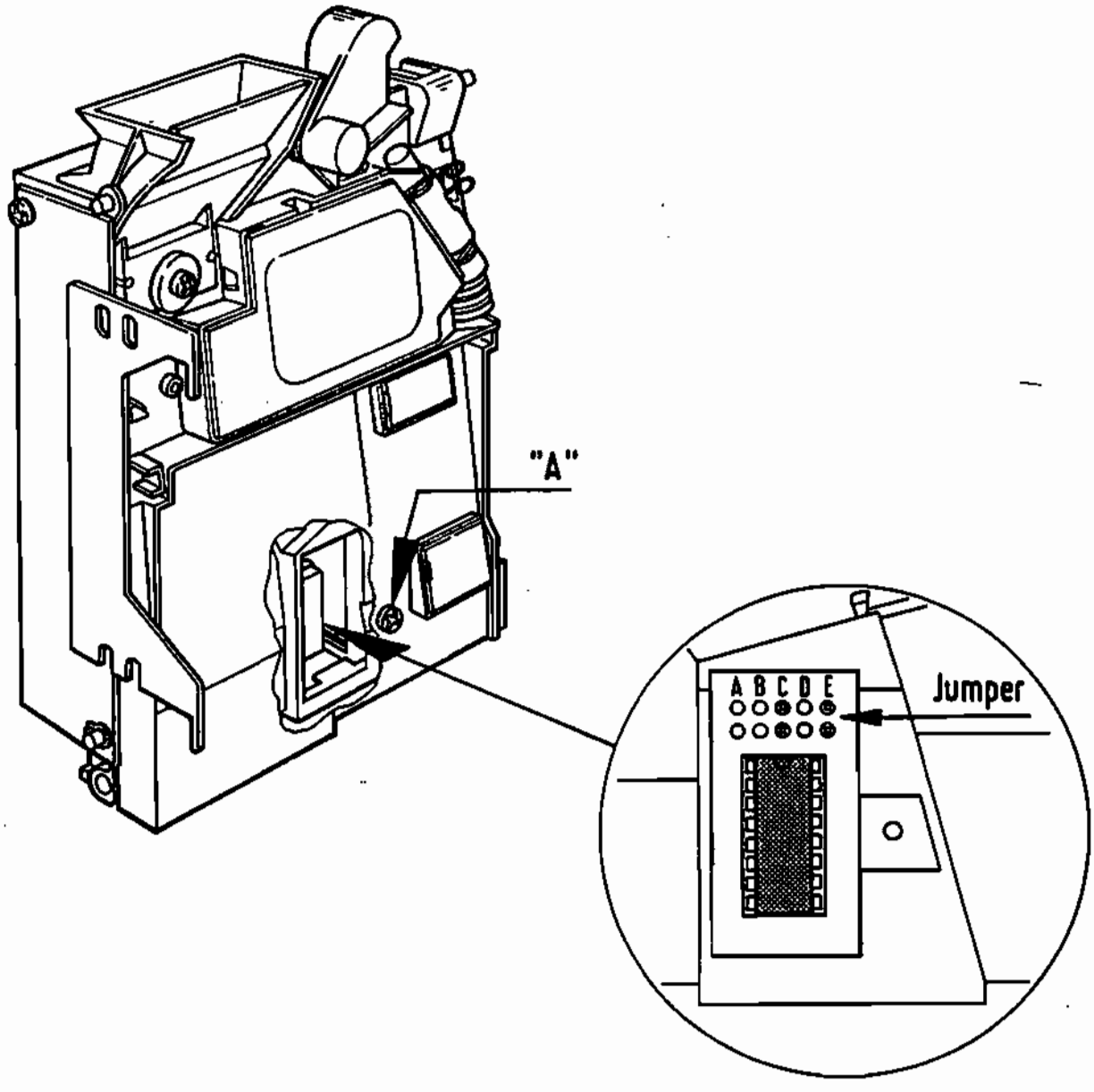

coinopmanuals.com

UNIT DESCRIPTION

OUTPUT TRANSFORMER

FOR NSM–PHONOGRAPHS

ES V–CD TECHNOLOGY

With output transformer part no.: 177 075

to
Technical Information, ASSY

176 393	THE PERFORMER GRAND II
176 352	THE WIZARD/ OLD FASHION WIZARD
176 514	THE PERFORMER CLASSIC
176 610	CD HIDE–AWAY II
176 598	FIREBIRD II
176 705	THE PERFORMER WALL

N S M
Aktiengesellschaft
Saarlandstraße 240
55411 Bingen am Rhein

13

Page 1301–1305

coinopmanuals.com

OUTPUT TRANSFORMER

NSM phonographs are designed to drive external loudspeakers additionally to the internal loudspeakers. We have integrated this output transformer to connect several loads of different loudspeaker types.

The output transformer (part–no.:177 075) is connected directly to the terminals of the output amplifier. It has an input impedance of 2 ohms and transforms the input voltage down so that smaller output voltages are available at the connection terminals E1 through E7 permitting speakers with lower impedances to be connected.

A number of loudspeakers can be connected together (in parallel) up to a total maximum load of 125 W RMS per channel; depending on how much power is taken directly from the amplifier.

The table below shows the power required for a loudspeaker with the corresponding impedance at connection terminals E1 to E7. Also observe the output transformer diagram and connection schematics. Further information is given in the "TECHNICAL INSTRUCTIONS" under "Loudspeaker Connection".

Music power: Often there are two values given as technical data of loudspeakers:

Beneath the sine wave power (RMS) also the allowable peak load (music power) is given.

The music power can be calculated as follows:

Multiplying the sine wave power by the value 1.6 gives the value of the music power (e.g. 125W RMS x 1.6 = 200W music power).

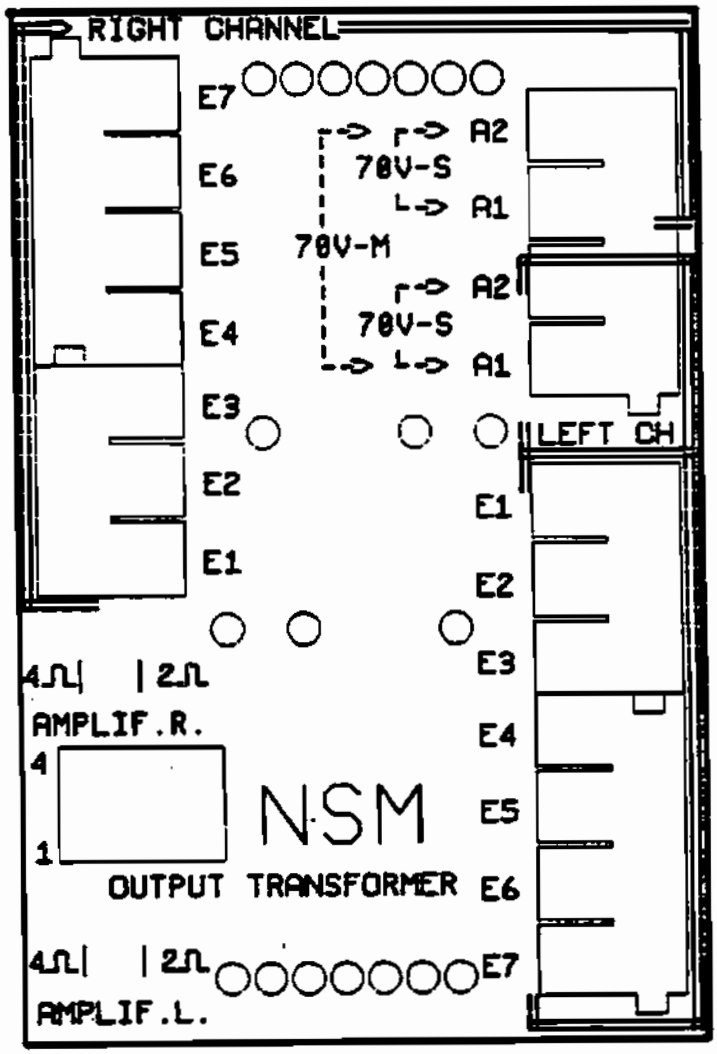

coinopmanuals.com

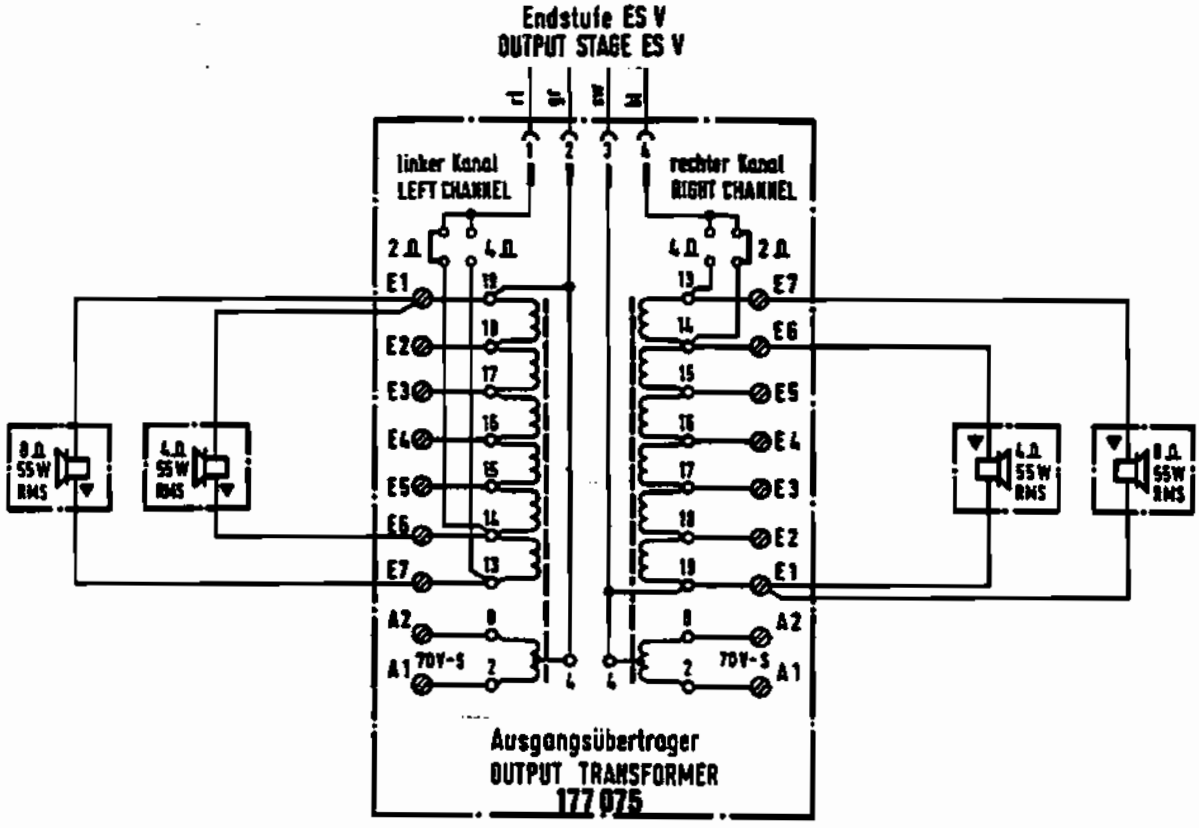

Anschlußschema für Ausgangsübertrager
CONNECTION DIAGRAM FOR OUTPUT TRANSFORMER

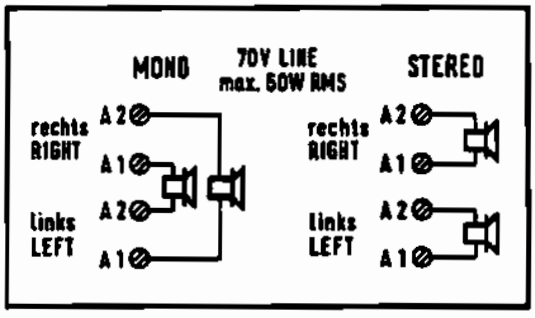

Klemme TERMINAL POSITION	Lautsprecher SPEAKER				
	1 Ω	2 Ω	4 Ω	8 Ω	16 Ω
E1 - E2	4W RMS	2W RMS	1W RMS	0,5W RMS	0,3W RMS
E1 - E3	16W RMS	8W RMS	4W RMS	2W RMS	1W RMS
E1 - E4	64W RMS	32W RMS	16W RMS	8W RMS	4W RMS
E1 - E5	112W RMS	55W RMS	28W RMS	14W RMS	8W RMS
E1 - E6	—	112W RMS	55W RMS	30W RMS	16W RMS
E1 E7	—	—	112W RMS	55W RMS	28W RMS

coinopmanuals.com

Examples of loudspeaker connections

The maximum power output of the amplifier is 2x125 W RMS (sine wave power) at 2 ohms.

Example of how to connect external loudspeakers to a phonograph with internal loudspeakers:
The phonograph itself consumes 2 x 55 W RMS (if directly connected at 4–ohm impedance).
Therefore, 2x65 W RMS is still available for external loudspeakers.
For example, one 4–ohm/65 W loudspeaker can be connected to terminals E1–E6 or one 8–ohm/65 W loudspeaker can be connected to terminals E1–E7.
See previous table of possible loudspeaker connections.

Example for connection of Wallboxes or Hide–Away's
If no loudspeakers are connected directly to the Wallbox the output transformer disposes of the full power of 125 W RMS. So you can connect one 4–ohm/125 W loudspeaker or two 8–ohm/55 W loudspeakers to the terminals E1–E7 of each channel.
Even other combinations are possible up to full load.
See previous table of possible loudspeaker connections.

Connection for lower phonograph output power
If full power is not required from the phonograph, its internal loudspeakers can be connected to the corresponding terminals of the output transformer E1–E5 (little lower) up to E1–E2 (much lower). See previous table of possible loudspeaker connections.

Connection for higher output power of the external loudspeakers
External loudspeakers can be connected directly to the output amplifier for higher output (terminals E1–E6 or E1–E7).

The total power amount of all connected loudspeakers at one channel of the output transformer (whether low impedance, high impedance or combined) may not exceed max. 200 W music power resp. 125 W RMS.

70 V – High Voltage Output

Additionally, the transformer also has a 70 V high–voltage output (A1–A2) for each channel.
These outputs are provided for operation of a widespread external loudspeaker system whereby the higher voltage keep the line losses low. Only loudspeakers with input transformers (socalled high–impedance loudspeakers of 75–ohm upwards) should be connected to this terminal. These outputs also provide a maximum of 60 W RMS each, e.g. two 30 W loudspeakers (150–ohm each) can be connected to each channel, or four 15 W loudspeakers (300–ohm each).

	A1–A2 of each channel	
Loudspeaker–Impedance	Output power (music)	Output power (RMS)
75 Ohm	95 W	60 W
100 Ohm	80 W	50 W
150 Ohm	20 W	33 W
200 Ohm	40 W	25 W
250 Ohm	32 W	20 W
300 Ohm	25 W	16 W

coinopmanuals.com

70 V – MONO Mode

Since the high–voltage coils are connected with their center, a loudspeaker connected between A1–A2 of the channels left or right radiates sound from both (stereo) channels; for this mono mode no special NF–coupling of the channels is necessary, coupling is provided by the transformer.

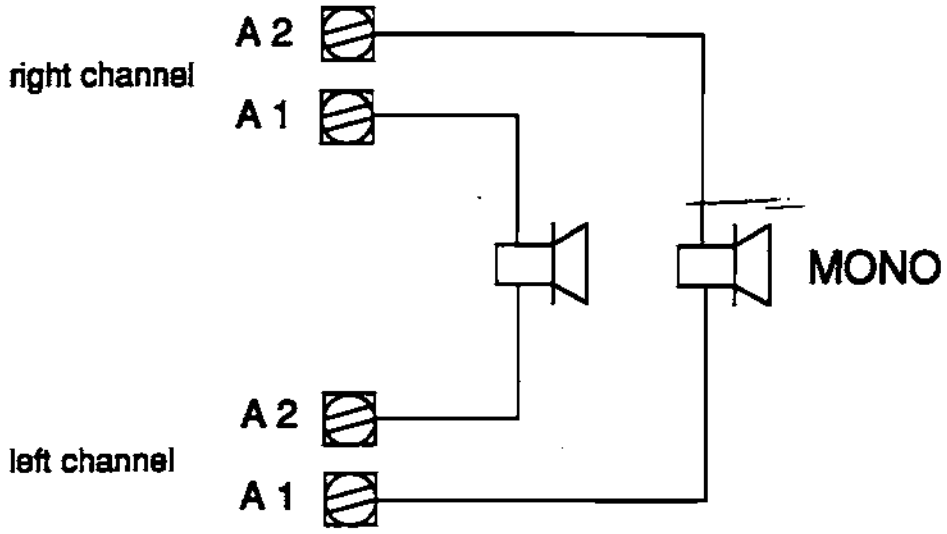

70 V – STEREO Mode

If the loudspeakers are connected to A1–A2 of each channel, stereo mode is possible, but without NF–coupling of the channels.

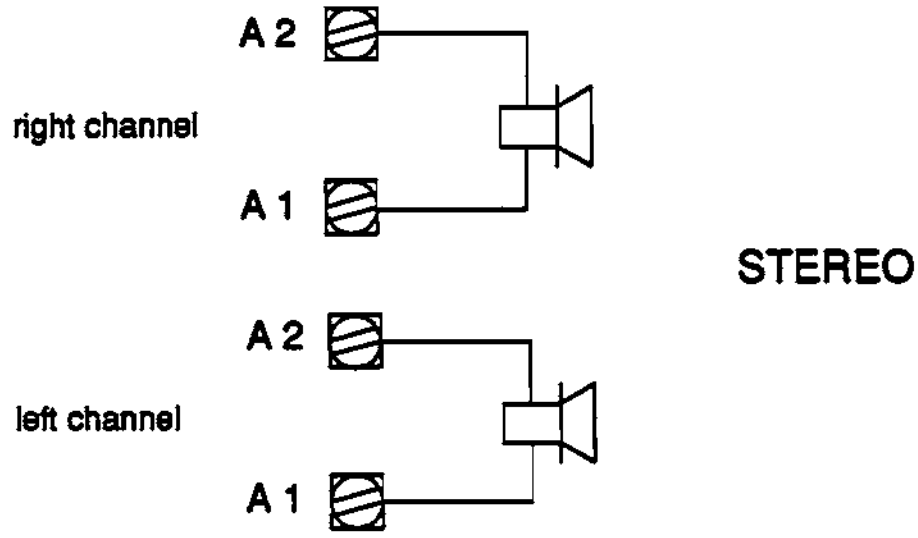

coinopmanuals.com

TROUBLE SHOOTING

FOR NSM–PHONOGRAPHS

ES V–CD TECHNOLOGY

to
Technical Information, Assy

176 393	THE PERFORMER GRAND II
176 352	THE WIZARD/ OLD FASHION WIZARD
176 514	THE PERFORMER CLASSIC
176 610	CD HIDE–AWAY II
176 598	FIREBIRD II
176 705	THE PERFORMER WALL

N S M
Aktiengesellschaft
Saarlandstraße 240
55411 Bingen am Rhein

14

Page 1401–1406

coinopmanuals.com

INDEX

1 DESCRIPTION OF MALFUNCTION / CAUSE

2 ERROR DISPLAYS / TABLE OF ERROR MESSAGES

3 TROUBLE SHOOTING FOR NSM PHONOGRAPHS ES–IV/CD TECHNOLOGY

coinopmanuals.com

1 DESCRIPTION OF MALFUNCTION / CAUSE

The follwing table gives a short reference of the posible solution to vepair a phonograph that diol not work.

DESCRIPTION	CAUSE
Phonograph illumination and LED's in central unit/CD supply do not light up.	1. Power cord 2. Main switch 3. Power fuse (switch plate/fuse box)
Phonograph illumination okay, LED's in central unit do no light up.	1. Plug connection ST 1 of central unit 2. Fuses SI 1–5 of central unit 3. Power transformer connection
Fan for output stage does not run while disc is playing.	1. Plug connection ST 4 2. Triac TC 1. 3. Transistor T2 / T1.
LED's in central unit do not light up or are darker Fuses are okay.	1. Voltage regulators VR 1–6 in central unit defective 2. Short circuit in connected units. (Pull plugs one after another and observe LED's).
No tone signal at loudspeaker even though a CD is playing and the switched on.	1. Loudspeaker connection 2. Plug connection of frequency volume is network and output transformer 3. Interruption on signal wire
Volume reduced by electronic protection device.	1. Loudspeaker mismatch (less than 2 ohms impedance) due to remote speakers. 2. Transistor T 9 defective. 3. Output transistor defective. 4. Control unit defective.
Poor bass reproduction.	1. Loudspeaker connections reversed.
Er xx–display.	See "Error Displays".
Luminous effect lights do not light phonographs with light generator).	1. Fuse on PCB light organ (running light) 2. Plug connection to PCB light organ

coinopmanuals.com

2 ERROR DISPLAYS / TABLE OF ERROR MESSAGES

After power on the phonograph, respectivly after each closing of the programming mode the microprocessor on the PCB Control Unit checks all memoried values. If there is detected an error on the programmable memory area, the corresponding programm step is entered. The display shows the command number Pxxx and "Er 31" is flashing. Also the lamp "error" flashes.
With entering the service mode and input of the correct value and pressing the key "H" this error is cleared.
After power on the phonograph, the malfunction display "Display 3" an the flashing lamp "error" remains visible for 2 sec. Here after the phonograph is operational without regarding the malfunctioning part.
When entering the programming mode there is a possibility for service and maintenance requests. With the command of group 15x and 16x it is possible to check, or to initialise CD's to, the phonograph. By using P150 the last 20 errors occured while operating are display sequentially including the information about CD–no. and date of occurance.
The following table gives an overview of the error messages and the possible corrections.

coinopmanuals.com

Table 4: "Error Displays"

Displays 1	2	3	Possible Causes	Corrections
	Er	01	EPROM contents (CONTROL–UNIT) disturbed.	Change EPROM (IC2) .
	Er	10	RAM (CONTROL–UNIT) defective.	Change RAM (IC 3). After that reprogram all program steps.
	Er	11	RAM contents (CONTROL–UNIT) short–term disturbance.	No correction necessary; program is reinitialized. Change RAM IC 3 if frequently occurring.
	Er	12	RAM battery is empty.	Change RAM (IC 3). After that reprogram all program steps.
	Er	20	Verification errors in program (CONTROL UNIT).	No correction necessary; program is reinitialized. Change CPU IC 1 if frequently occurring.
Pxxx	Er	30	Memory contents (CONTROL UNIT) invalid.	No correction necessary; program step Pxxx (in Display 1) is automatically reprogrammed.
Pxxx	Er	31	Memory contents (CONTROL UNIT) invalid or not programmed.	Program step Pxxx shown in Display 1 must be reprogrammed.
Pxxx	Er	40	Wrong price setting.	Check price setting and reprogram if necessary.
	Er	50	Coin mechanism defective. Too much credit.	Check coin mechanism.
	Er	6x	Error at CD player.	See Er 60 – Er 63.
	Er	60	Connection to the CD–player interrupted. No supply voltage present for decoder board or CD player.	Check connection cables to the decoder board, check fuses.
	Er	61	No CD recognized by CD player. No CD in CD tray, CD defective. Player defective.	Check CD and exchange if needed. Exchange CD player. Exchange decoder board.
	Er	62	Specified track on the CD not found.	Check the CD.
	Er	63	Malfunction while playing a CD.	Check the CD player with equipped CD for easy running.
	Er	7x	Malfunction on CD changer.	If error display does not disappear after 2 sec., error cannot be automatically corrected. No CD will be played until cabinet switch or "power on" is activated.
	Er	70	Malfunction of operating control.	No correction necessary.
	Er	71	Error during grip from magazine.	Equip CD–tray to magazine. Check alignment from magazine to pickup assy and adjust if necessary. Check function of light barrier OPPUM.
	Er	72	Error during replacing CD in magazine. Malfunction of grip lever.	Check alignment of magazine to pickup assy and adjust if needed. Check function of grip. Check function of light barriers OPGRL and OPGRR.
	Er	73	Malfunction during lift drive. Playing of CD not possible.	Check lift for jamming. Check function and correct adjustment of light barrier OPSTP (drive wheel).
	Er	74	End position of lift not o.k.. Playing of CD not possible.	Check function and adjustment of light barrier OPEND.
	Er	80	Short circuit on wallbox signal wire.	Check wallbox connection.
	Er	81	Malfunction of the audio processor (CB CENTRALE).	Change IC 1 = TDA 4390 if frequently occurring.
	Er	90	Title display, three blocking in sequence, not functional anymore.	Blocking remedy
	Er	91	Blocking title display while left movement.	
	Er	92	Blocking title display while right movement.	
	Er	93	Blocking title display, stack left.	see also chapter 9 "Title display" the paragraph 1.4
	Er	94	Blocking title display, stack right.	Jammed or dislocated title holders.

coinopmanuals.com

3 Trouble–Shooting Chart for NSM Phonographs ES V / CD–Technology

Conditions: Line voltage present, line connection and power supply in order.

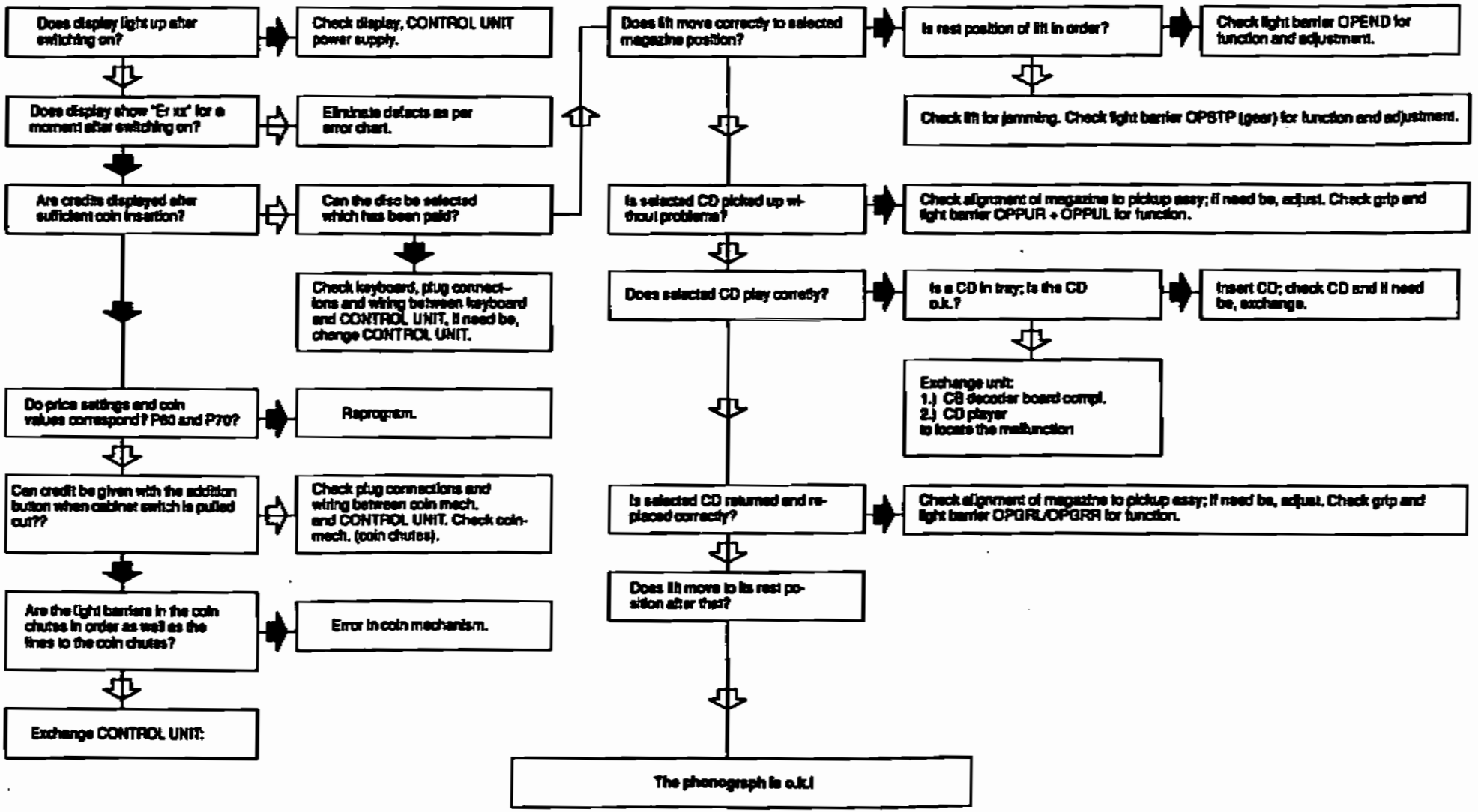

: jes

: no

Compare also 1.2 "Error Displays".

coinopmanuals.com

ACCESSORIES

FOR NSM–PHONOGRAPHS

ES V–CD TECHNOLOGY

to
Technical Information, Assy

176 393	THE PERFORMER GRAND II
176 352	THE WIZARD/ OLD FASHION WIZARD
176 514	THE PERFORMER CLASSIC
176 610	CD HIDE–AWAY II
176 598	FIREBIRD II
176 705	THE PERFORMER WALL

N S M
Aktiengesellschaft
Saarlandstraße 240
55411 Bingen am Rhein

15

coinopmanuals.com

INDEX

1 MICROPHONE with paging switch

2 REMOTE CONTROL WALL BOXES

3 REMOTE CONTROLS
3.1 Infrared remote control
3.2 Remote control with cable

4 OUTPUT TRANSFORMER with cable

5 CASH COUNTER

6 DATAPRINT
6.1 Data transfer and memorizing
6.2 Transfer to Printer

coinopmanuals.com

1 MICROPHONE with Paging Switch

Connection via microphone socket to the central unit.
Microphone announcements are possible in any phonograph mode.

The microphone amplifier with electronic switch–over is integrated into the central unit.
The volume for the background music and microphone can be adjusted separately in the central unit.

Connection cable with plug and microphone socket–length 10 m or 25 m (Part–No. see Spare Parts List in "Technical Instructions").

2 REMOTE CONTROL WALL BOXES

FIRE STORM	w. Title indication II
CARAVELLE II	w. Title indication II

For connection to NSM phonographs in CD technology. Connection Adapter belongs to the equipment. (Part–No. see Spare Parts List in "Technical Instructions"). Detailed installation instructions are included in the adapter kit.

3 REMOTE CONTROLS

3.1 Infrared Remote Control

Wireles remote control consisting of transmitter, receiver and parts for installations. See wiring diagram for connections.
(Part–No. see Spare Parts List in "Technical Instructions").

3.2 Remote Control with Cable

The connection points are illustrated in the wiring diagram and described in unit description "REMOTE CONTROL".
(Part–No. see Spare Parts List in "Technical Instructions").

4 OUTPUT TRANSFORMER with cable

Significantly expanded adaptation capabilities and low line losses with 70 V output. (See Unit description "OUTPUT TRANSFORMER").
(Part–No. see Spare Parts List in "Technical Instructions").

5 CASH COUNTER

NSM phonographs can be subsequently modified with an electro–mechanical cash counter (12 V = pulse counter).
(Part–No. see Spare Part List in "Technical Instructions").

coinopmanuals.com

6 DATAPRINT

The printer is intended for connection to NSM phonographs ES IV–CD Technology. A detailed description is included with the printer. Putting in the paper roll and color ribbon are described in detail in the "TECHNICAL INSTRUCTIONS" for the DATAPRINT.

6.1 Data Transfer and Memorizing

- Turn on service program by opening cabinet and pull out cabinet switch manually, Display 1 "P010".
- Put in printer connector into "Service Socket" of the Control Unit.
- Enter "C", Display 1 "P".
- Enter "30" and "H", Display "P030".
- Enter Code "0" and "H".

Counters + Errors, as well as popularity are transferred.

Note: Display 3 "E0" appears if an error occurs during data transfer.

Attention: After the data transfer has finished succesfully the memory contents of the phonograph are cleared with closing the cabinet lid!

6.2 Transfer to Printer

- Switch on service program by opening cabinet; if needed, pull the cabinet switch manually, Display 1 "P010".
- Plug printer connector into socket of Control Unit.
- Enter "C", Display 1 "P".
- Enter "31" and "H", Display 1 "P031".
- Enter code for the desired print–out and press "H".
  "0" and "H" = complete information
  "1" and "H" = all cash counters
  "2" and "H" = all counters
  "3" and "H" = settings
  "4" and "H" = popularity
  "5" and "H" = hit parade of this location
  "6" and "H" = last 20 error messages

Note: When a popularity counter has reached value 200, all popularity counters are divided by half of the amount. After dividing the popularity printed out is relative; the number of divisions appears in the printout: "RELATIVE 000" to "xxx".
If the printer does not start, "E0" appears in Display 3.

coinopmanuals.com

Examples of print–outs

1. Print–out in text mode P030

Open the cabinet lid (door) of the phonograph with ES–V technology and pull the cabinet switch.
Connect the DATA PRINT to the evaluation socket (ST2 on p.c.b. control unit ES–V).
Enter P030: Key 0 – to start the print–out of all available data.

```
04.02.93 / 13.58    V23.1
* NSM *
BOX ES V           V.0003
BOX-ANALYSE:
BOX-NR                0000
TIME                 14:02
DATE              04.02.93

COUNTERS:
CASH                     0
PLAYS                    0
TITLE-SELECTIONS         0
ALBUM-SELECTIONS         0
OVERPLAYS                0
FREE PLAYS               0
BACKGROUND PLAYS         0
AUTO PLAYS               0
ADVERTISE PLAYS          0
HAPPY HOUR CREDITS       0

POPULARITY:
CD:
001  092,085,072,100,
006  086,096,072,080,084
011  066,084,066,092,085
016  076,001,008,100,072
021  085,124,    ,002,
026      ,072,100,060,111
031  061,031,061,031,007
036  004,    ,016,038,087
041  050,127,002,018,120
046  066,016,075,097,016
051  025,016,072,004,070
056  002,100,002,036,052
061  093,030,004,016,096
066  001,109,084,066,016
071  090,090,007,042,016
076  090,090,007,062,004
081  066,084,066,016,060
086  004,106,082,016,088
091  006,091,016,090,090
096  060,066,069,106,004

HITLIST:
RANK CD TRACK PLAYS
  1  0401  240   2  7603  218
  2  3204  216   4  0416  201
  3  7601  194   6  2301  193
  4  2401  186   8  1401  180
  5  5201  170  10  0401  169
  6  0401  145  12  7408  144
  7  1101  141  14  3201  133
  8  6601  122  16  0401  122
  9  9201  120  18  6501  100
 10  5601   76  20  0301   72
 11  4901   51  22  0010   32
 12  0401   15  24  3201   14
 13  0301   10  26  0001    5
 14  4101    3  28  6905    1
 15  6900    1  30  0101    0

ERRORS:
NO. CODE TIME   DATE
NO ERRORS!

53948 BYTES FREI
```

Counters

Popularity

Hitparade with number of plays

Errors

After finishing the print–out and closing the cabinet lid (door) all counters are deleted!

coinopmanuals.com

2. Print–out in graphic mode P031

Prepare the appliance as described.

The command P031 offers several options:

P031:
- 0– All available data
- 1– Cashbox only
- 2– Counters and cashbox
- 3– General settings
- 4– Popularity
- 5– Hitparade
- 6– Errors

```
BOX ES V                V.0003
BOX-ANALYSE:

BOX-NR..............0000
TIME...............14:04
DATE............04.02.93

COUNTERS:
CASH.....................0
PLAYS....................0
TITLE-SELECTIONS.........0
ALBUM-SELECTIONS.........0
OVERPLAYS................0
FREE PLAYS...............0
BACKGROUND PLAYS.........0
AUTO PLAYS...............0
ADVERTISE PLAYS..........0
HAPPY HOUR CREDITS......0

BOX-STATUS:
BOX-CODE................0
CDS / TRACKS.........0024
STAND-BY LIGHTING...1105
ACTIVE LIGHTING.....1000
MAX.TIME/TRACK..........0
ORDER OF PLAY...........0
TRACKS IN A ROW.........0
TITLE DISP. PERIOD......0
CLR CREDIT..............2
CLR SELECTIONS..........2
MAX.VOLUME.............31
MAX.BGM-VOLUME.........16

PRICE SETTINGS:
P6X  PRICE    !P7X  VALUE
  1   1 0100  !  1    100
  2   1 0100  !  2    500
  3   3 0200  !  3    200
  4   3 0200  !  4      0
  5   3 0200  !  5      0

ALBUM SETTING...........1
BILL BONUS..............0
MONEY CONVERSION........0

FREE CREDIT SETTINGS:
START TIME..........00:00
STOP TIME...........00:00
ACTIVE ON DAYS...0000000
FREE CREDITS..........200

BGM SETTINGS:
START TIME..........00:00
STOP TIME...........00:00
ACTIVE ON DAYS...0000000
LOCK FOR BGM............0

AUTO PLAY SETTINGS:
START TIME..........00:00
STOP TIME...........00:00
ACTIVE ON DAYS...0000000
AUTO PLAY PERIOD........0

ADVERTISEMENT SETTINGS:
START TIME..........00:00
STOP TIME...........00:00
ACTIVE ON DAYS...0000000
ADVERTISEMENT PERIOD...0

LOCK OUT SETTINGS:
START TIME..........00:00
STOP TIME...........00:00
ACTIVE ON DAYS...0000000
ACTIVATE LOCK...........0

HAPPY HOUR SETTINGS:
START TIME..........00:00
STOP TIME...........00:00
ACTIVE ON DAYS...0000000
HAPPY HOUR BONUS........0
```

POPULARITY:

CD:

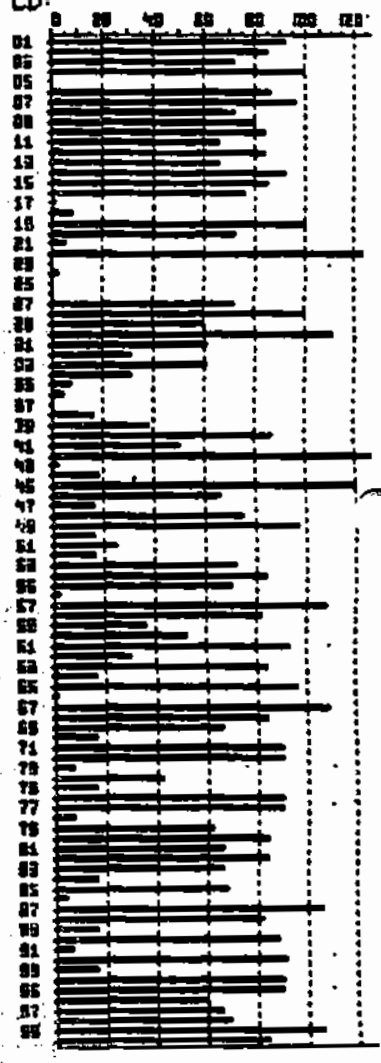

HITLIST:

RANK	CD	TRACK	PLAYS		
1	0401	240!	2	7603	21
3	3204	216!	4	0416	20
5	7601	194!	6	2301	193
7	7201	186!	8	1401	180
9	5201	170!	10	0401	169
11	0401	145!	12	7408	144
13	1101	141!	14	3201	133
15	9601	122!	16	0401	122
17	9201	120!	18	6501	100
19	5601	76!	20	0301	72
21	4901	51!	22	0010	32
23	0401	15!	24	3201	14
25	0301	10!	26	0801	5
27	4101	3!	28	6905	1
29	6908	1!	30	0101	0

ERRORS:

NO. CODE TIME DATE
NO ERRORS!

—END—

Abbreviations:

BGM= Background music

Wochentage: MTWTFSS

Monday
Tuesday
Wednesday
Thursday
Friday
Saturday
Sunday

0 = inactive day

coinopmanuals.com

BACTA* – Juke Box Data Output Standard (UK only)

This standard will provide a common hardware interface for all manufacturers equipment with data output in a identical format.
With the optional available BACTA interface one is able to output statistical data of the NSM phonograph to a hand held unit or remote device (Part number of this option: 176 719).

*) BACTA is the Trade Association for the Coin Operated Amusement Machine Industry

DATA TRANSFER TO A HAND HELD UNIT

Therefore a 4–pole jack socket and a 25 way 'D' type socket are used to connect this hand held unit to the NSM phonograph (also see figure on next page).
Several commands entered by the user via the hand held unit offer the possibilities to

read out of statistical data of the phonograph,
delete statistical data of the phonograph,
program a serial number to the phonograph.

A simple ASCII protocol is defined to ensure that data output from the phonograph to the hand held unit or remote device may be checked on receipt and a repeat transmission requested if required.
The phonograph must respond to a command from the hand held unit within a timeout period of 3 seconds by continuously monitoring the data line and waiting for the transmit command from the hand held unit.
The commands:

"D1" the phonograph transmit the available statistical data to the hand held.

"C" the phonograph (if in service mode) respond with "ACK" and after closing the cabinet lid (door) the statistical data were deleted.

"S...." the phonograph accept the 8 byte serial number following "S" as the new serial number. This serial number is transmitted with each data transfer.

PRINT–OUT TO ANY PRINTER

With command **P032** entered by the key pad of the phonograph one is able to make a print–out of the statistical data of the phonograph to a serial printer (also see figure on next page).

To make a print–out of the statistical data:

open the cabinet door of the phonograph, set it to service mode and

connect the BACTA compatible printer to the serial interface "BACTA" located left hand at the rear side of the phonograph or at the right inner side of a wall box (see figure below, the 25 way 'D' type socket).

Call the command P032 and confirm with key "H".

The data transfer and the print–out too are started immediately. To interrupt the transfer just push the cabinet switch.
After the print–out of the statistical data is finished, the statistical data of the phonograph are not deleted automatically. You have to delete the data of the phonograph with the command P033! See manual.

coinopmanuals.com

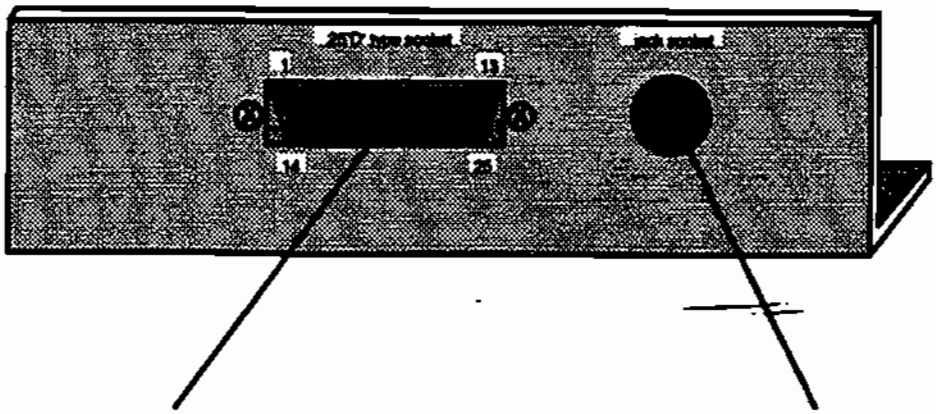

25'D' type socket jack socket

Pin	Signal	Connection
1	protective ground	
2	received data RxD	WHITE
3	transmitted data TxD	BLUE
7	signal ground GND	GREEN
11	–12V	
25	+12V	

Transmission parameters:

1200 Baud for printer (selected with P032)
9600 Baud for hand held
asynchronous, half duplex
1 start bit, 8 data bits, no parity, 1 stop bit

For detailed information about the BACTA standard refer to:

BACTA

122 Clapham Common North Side
London SW4 9SP
Telephone: 071–2284107
Telex: 916040
Fax: 071–2230257